Helen Ward, Commissioner
Larry Granados, Commissioner

Abigail Mayer, Chairman

Lewis Rice, Commissioner
Lauren Turner, Vice Chairman

ROANOKE ZONING BOARD OF ADJUSTMENT AGENDA
DECEMBER 7, 2023
7:00 PM
SPECIAL MEETING

ROANOKE CITY HALL
CITY COUNCIL CHAMBERS – 2ND FLOOR
500 S. OAK STREET
ROANOKE, TEXAS 76262

A. CALL TO ORDER

B. PUBLIC INPUT

This item is available for citizens to address the Zoning Board of Adjustment on any issues that are not the subject of a public hearing. No action by law may be taken on the topic. The presiding officer reserves the right to impose a time limit on this portion of the agenda.In order to provide the highest quality audio, all speakers need to speak at the podium.

C. APPROVAL OF THE MINUTES

1. Consideration and action on approval of the minutes from the regular Zoning Board of Adjustment meeting held on August 17, 2023.

D. NEW BUSINESS

1. Public hearing to consider a variance request from Binod Aryal, seeking relief from the City's Code of Ordinances Planned Development, PD # 2014-16 Marshall Creek Section B(d)(2)(A)&(B) regarding front yard and side yard setbacks for a property located at 116 Willow Lane, Lot 16A, Block H, Green Acres Estate, Second Section.

2. Consideration and action on a variance request (V 2023-04) from Binod Aryal seeking relief from the city's code of ordinances Planned Development, PD 2014-16 Marshall Creek Section B(d)(2)(A)&(B) regarding front and side yard setbacks for a property located at 116 Willow Lane, Lot 16A, Block H, Green Acres Estate, Second Section.

E. ADJOURNMENT

CERTIFICATION

I certify that the above notice was posted at City Hall, 500 South Oak Street, Roanoke, Texas, on Thursday, November 30, 2023, by 5:00 pm, in accordance with Chapter 551, Texas Government Code.

April S. Hill, City Secretary

*Any person planning to attend this meeting that may require auxiliary aids or services should request accommodations two (2) days prior to the meeting by calling (817) 491-8152. **BRAILLE IS NOT AVAILABLE**.

A public wireless network is now available in the Council Chambers for use during meetings. It is available from 7am to 11pm Monday thru Friday. The name of the network is: COR-Guests

AGENDA ITEM

TO: ZBA Board Members

SUBJECT: 08/17/2023 - ZBA Minutes

MEETING DATE: December 7, 2023

DEPARTMENT: City Secretary

ITEM SUMMARY:
Consideration and action on approval of the minutes from the regular Zoning Board of Adjustment meeting held on August 17, 2023.

INFORMATION:

STAFF RECOMMENDATION:

SPECIAL CONSIDERATION:

FINANCIAL CONSIDERATION:

ATTACHMENTS:
1. ZBAMin 08-17-2023

Helen Ward, Commissioner
Larry Granados, Commissioner

Abigail Mayer, Chairman

Lewis Rice, Commissioner
Lauren Turner, Vice Chairman

ROANOKE ZONING BOARD OF ADJUSTMENT REGULAR MEETING MINUTES
AUGUST 17, 2023
7:00 P.M.

ROANOKE CITY HALL
500 S. OAK STREET
ROANOKE, TEXAS 76262

Present: Chairman Abigail Mayer; Vice Chairman Lauren Turner; Commissioners: Helen Ward, Larry Granados, and Lewis Rice; Development Services Administrator J.R. Hames, and Secretary Sherry Gragg.

A. CALL TO ORDER

Meeting called to order at 7:00 p.m.

B. PUBLIC INPUT

No one wished to speak.

C. APPROVAL OF THE MINUTES

1. Motion made by Helen Ward second by Lauren Turner to approve the minutes from the Zoning Board of Adjustment meeting held on July 20, 2023.

Motion carried 4-0-1. Commissioner Larry Granados abstained, as he was not present at this meeting.

D. NEW BUSINESS

1. Public hearing to consider an appeal of an administrative decision, to-wit: the permit was denied pursuant to Sections12.262 (2) and 12.751(D) of the Code of Ordinances. The applicant is wanting to build an accessory structure that exceeds the maximum height and also the maximum size of an accessory structure in a Residential Zoning District. The proposed project is located on the south side of Dallas Drive, next to the Church of Christ, legal description: A0923a MEP & PRR, TR 58, 1.0 Acres, Old DCAD TR #19(1) City of Roanoke, Denton County, Texas, and having a property address of 604 Dallas Drive, Roanoke, Texas.

Public hearing started at 7:03 p.m.

No one wished to speak.

Public hearing ended at 7:04 p.m.

2. Motion made by Lewis Rice second by Helen Ward to deny an appeal of an administrative decision for a permit that was denied pursuant to sections 12.262 (2) and 12.751 (D) of the code of ordinances. The project is located on the south side of Dallas Dr., next to the Church of Christ, Legal Description, A0923A MEP & PRR Tr 58, 1.0 acres, Old DCAD Tr #19(1) City of Roanoke, Denton County, Texas and having a property address of 604 Dallas Dr, Roanoke, Texas

Motion carried 4-1-0. Commissioner Lauren Turner was opposed.

D. ADJOURNMENT

Motion made by Lauren Turner second by Lewis Rice to adjourn the meeting at 7:19 p.m.

Motion carried unanimously.

_____
Abigail Mayer, Chairman

_____
April S. Hill, City Secretary

AGENDA ITEM

TO: ZBA Board Members

SUBJECT: PH Notice - 116 Willow Lane V-2023-04

MEETING DATE: December 7, 2023

DEPARTMENT: City Secretary

ITEM SUMMARY:
Public hearing to consider a variance request from Binod Aryal, seeking relief from the City's Code of Ordinances Planned Development, PD # 2014-16 Marshall Creek Section B(d)(2)(A)&(B) regarding front yard and side yard setbacks for a property located at 116 Willow Lane, Lot 16A, Block H, Green Acres Estate, Second Section.

INFORMATION:

STAFF RECOMMENDATION:

SPECIAL CONSIDERATION:

FINANCIAL CONSIDERATION:

ATTACHMENTS:
1. PH Notice - V-2023-04 - 116 Willow Lane - Side Yard Setbacks - Republish 12072023

City of Roanoke
Notice of Public Hearing
Variance Request

NOTICE OF PUBLIC HEARING
CITY OF ROANOKE
V-2023-04

Roanoke Zoning Board of Adjustment

THE ROANOKE ZONING BOARD OF ADJUSTMENT WILL HOLD A PUBLIC HEARING ON THURSDAY, DECEMBER 7, 2023, TO CONSIDER A VARIANCE REQUEST FROM BINOD ARYAL, SEEKING RELIEF FROM THE CITY'S CODE OF ORDINANCES PLANNED DEVELOPMENT, PD # 2014-16 MARSHALL CREEK SECTION B(d)(2)(A)&(B) REGARDING FRONT YARD AND SIDE YARD SETBACKS FOR A PROPERTY LOCATED AT 116 WILLOW LANE, LOT 16A, BLOCK H, GREEN ACRES ESTATE, SECOND SECTION. THE PUBLIC HEARING WILL BE HELD AT 7:00 P.M. IN THE CITY COUNCIL CHAMBERS LOCATED AT 500 S OAK STREET, ROANOKE, TEXAS.

CERTIFICATION

I certify that the above notice was posted at City Hall, 500 South Oak Street, Roanoke, Texas, on Friday, November 17, 2023, by 5:00 p.m.

April S. Hill, City Secretary

Persons with disabilities who plan to attend this meeting, who may need auxiliary aids or services are requested to contact April S. Hill, City Secretary, at City Hall, (817) 491-2411 two (2) days prior to the meeting so that appropriate arrangements can be made. **BRAILLE IS NOT AVAILABLE.

A public wireless network is now available in the Council Chambers for use during meetings. It is available from 7am to 11pm Monday thru Friday. The name of the network is: COR-Guests

AGENDA ITEM

TO: ZBA Board Members

SUBJECT: 116 Willow Lane Variance (V-2023-04)

MEETING DATE: December 7, 2023

DEPARTMENT: Planning

ITEM SUMMARY:
Consideration and action on a variance request (V 2023-04) from Binod Aryal seeking relief from the city's code of ordinances Planned Development, PD 2014-16 Marshall Creek Section B(d)(2)(A)&(B) regarding front and side yard setbacks for a property located at 116 Willow Lane, Lot 16A, Block H, Green Acres Estate, Second Section.

INFORMATION:
ZONING: Marshall Creek PD 2014-16

Front yard setbacks are 20 feet, and side yard setbacks are 5 feet.

1. According to the survey provided, the east side wall is four feet three inches (4'3") from the side property line and continues encroaching to four feet one inch (4'1").
2. The front wall of the garage is encroaching into the front yard setback six feet five inches (6'5").

The applicant cannot get an approved final inspection without a variance for the setbacks.

The city's building department suggested the applicant seek a variance and, if granted, will require revised drainage plans to be approved by the city's engineering consultant prior to final approval.

STAFF RECOMMENDATION:

AGENDA ITEM

City staff does not think that approval of this variance will have a negative impact on neighboring properties.

SPECIAL CONSIDERATION:

FINANCIAL CONSIDERATION:

ATTACHMENTS:

1. V-2023-04 - 116 Willow Ln-16 A Block H Paid App
2. 116 Willow Lane Survey
3. 116 Willow Lane PLANS APPROVED

RECEIVED
By Anthony Salcido at 2:39 pm, Sep 18, 2023

CITY OF ROANOKE
500 S. OAK STREET
ROANOKE, TEXAS 76262
(817) 491-2411

Zoning Board of Adjustment Application

Variance ☑ Special Exception ☐ Zoning Board Appeal ☐

Name of Applicant	Address of Applicant	E-Mail
Binod Aryal	116 WILLOW LANE, ROANOKE, TEXAS 76262.	binodaryal340@gmail.com
		Phone
		Mobile Phone 410-336-6654

Name of Business	Type of Business
Representing myself, Im the home owner	Single Family Residence, is my house. This is where I want to live.

Property Address	Lot / Block / Subdivision
116 WILLOW LANE, ROANOKE, TEXAS 76262.	16 A Block H

Explanation of request: To request 9" encroachment of the house into the left side setback

City Setback is 5' for the left side of the lot. Due to construction forms set up the house was shift and moved

Having only 4'-3" for setback instead of the 5' required, (left setback))

For Variance please state hardship: I cannot get a C.O. for my own house

Fees: Variance-$200.00, Special Exception-$200.00, Zoning Board Appeal-$100.00. Fees are non-refundable. The Zoning Board of Adjustment meets on the 3rd Thursday of the month, at 7:00 p.m. in the City Hall Council Chamber located at 500 S. Oak Street. You will be notified by e-mail of the date the request will be presented before the ZBA. For a Variance or Special Exception, property owners located within 200 feet will be notified by mail. Electronic drawings and any additional information that needs to be reviewed prior to the meeting must be received with the application.

FOR OFFICE USE ONLY

Date Payment Received	Date of Meeting	Date Notified	Item No.
$200.00 rec#704422 09-18-2023 AS	10/19/2023	10/05/2023	V-2023-04

07/20/2023

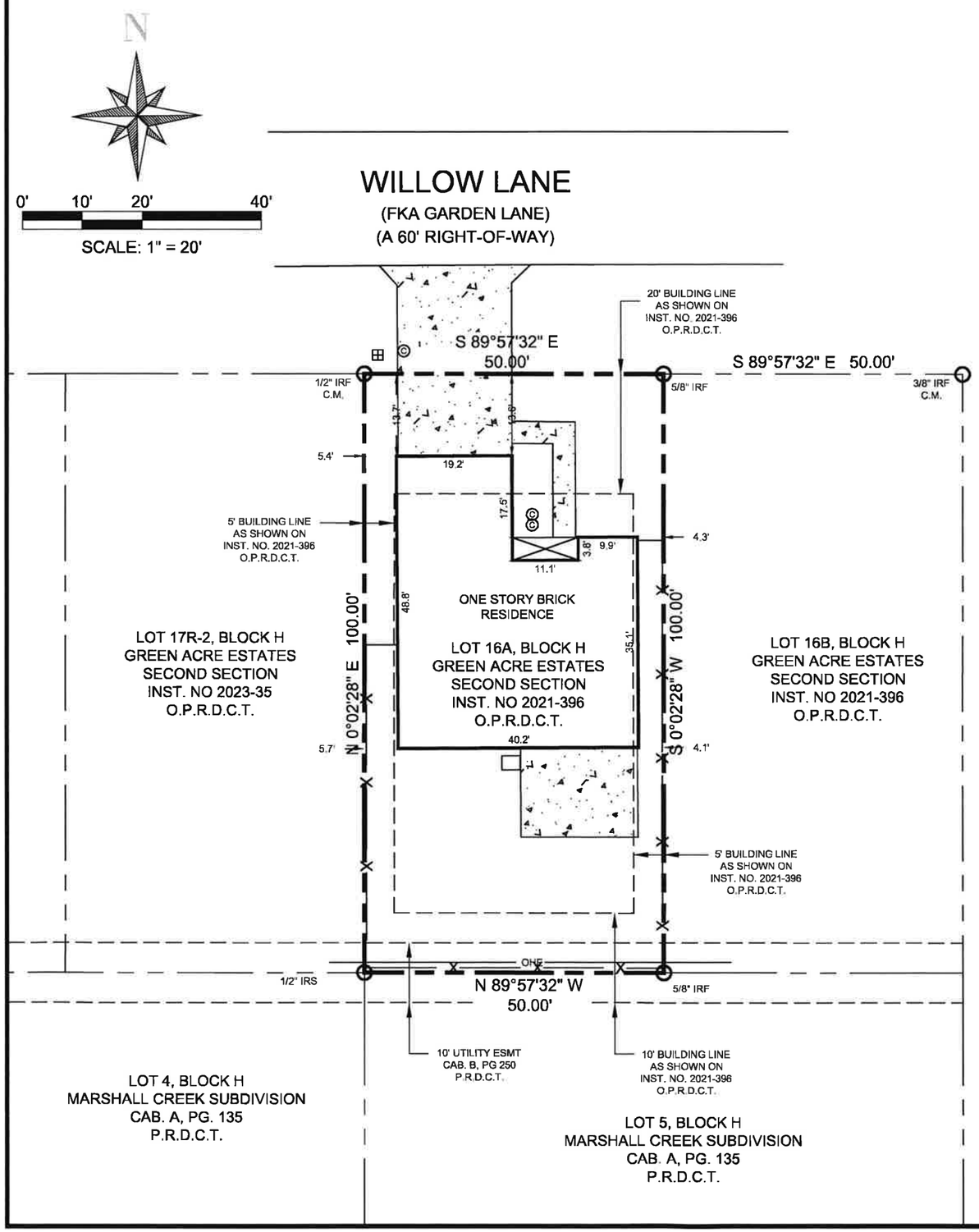

SURVEY PLAT

This is to certify that I have, this date, made an on the ground survey of the property located on 116 Willow Lane in the City of Roanoke, Texas, described as follows:

Lot 16A, Block H, Green Acre Estates, an addition to the City of Roanoke, Denton County, Texas, according to the plat thereof recorded in Instrument No. 2021-396, Official Public Records of Denton County, Texas.

	GAS METER		FIRE HYDRANT
	GAS VALVE		WATER METER
	TELEPHONE PEDESTAL		FUEL PORT
	POWER POLE		WATER VALVE
	DOWN GUY	P	TRANSFORMER PAD
S	S.S. MAN HOLE	E	ELECTRIC BOX
C	CLEAN OUT		TREE
W	MONITERING WELL		SIGN
P	TRAFFIC SIGNAL POLE		LIGHT POLE
T	TRAFFIC SIGNAL BOX	-X-	TYPICAL FENCE
H	SWB MAN HOLE	B	BOLLARD
G	PROPOSED GRATE INLET	PCONC - PROPOSED CONCRETE	
V	VAULT	PNG - PROPOSED NATURAL GROUND	
D	STORM DRAIN MAN HOLE	PPOOL - PROPOSED POOL	

FLOOD CERTIFICATE
As determined by the FLOOD INSURANCE RATE MAPS for Denton County, Texas, the subject property Does Not lie within a Special Flood Hazard Area (100 Year Flood), Map date 09-25-2009 Community Panel No. 48121C0515 G subject lot is located in Zone X.
If this site is not within an identified flood hazard area, this Flood Statement does not imply that the property and/or structures thereon will be free from flooding or flood damage. On rare occasions, greater floods can and will occur and flood heights may be increased by man-made or natural causes. This Flood Statement shall not create liability on the part of the Surveyor.

The plat hereon is a true, correct and accurate representation of the property as determined by an on the ground survey, subject to any and all easements, reservations and restrictions that may be of record, the lines and dimensions of said property being indicated by the plat, the size, location and type of buildings and improvements are as shown, all improvements being within the boundaries of the property set back from property lines the distance indicated, and the distance from the nearest intersection as indicated is as shown on said plat. There are no visible encroachments, conflicts, or protrusions except as shown.

STATE OF TEXAS REGISTERED Larry Turman 1740 PROFESSIONAL LAND SURVEYOR

Larry Turman
Registered Professional Land Surveyor No. 1740

CENTRO RESOURCES, LLC
TBPS No. 10193888
1475 HERITAGE PKWY., STE 217
MANSFIELD, TEXAS 76063
(817) 354-1445
surveygroup@att.net

JOB NO.:	23-029
DATE:	May 3, 2023
SCALE:	########
DRAWN BY:	RM

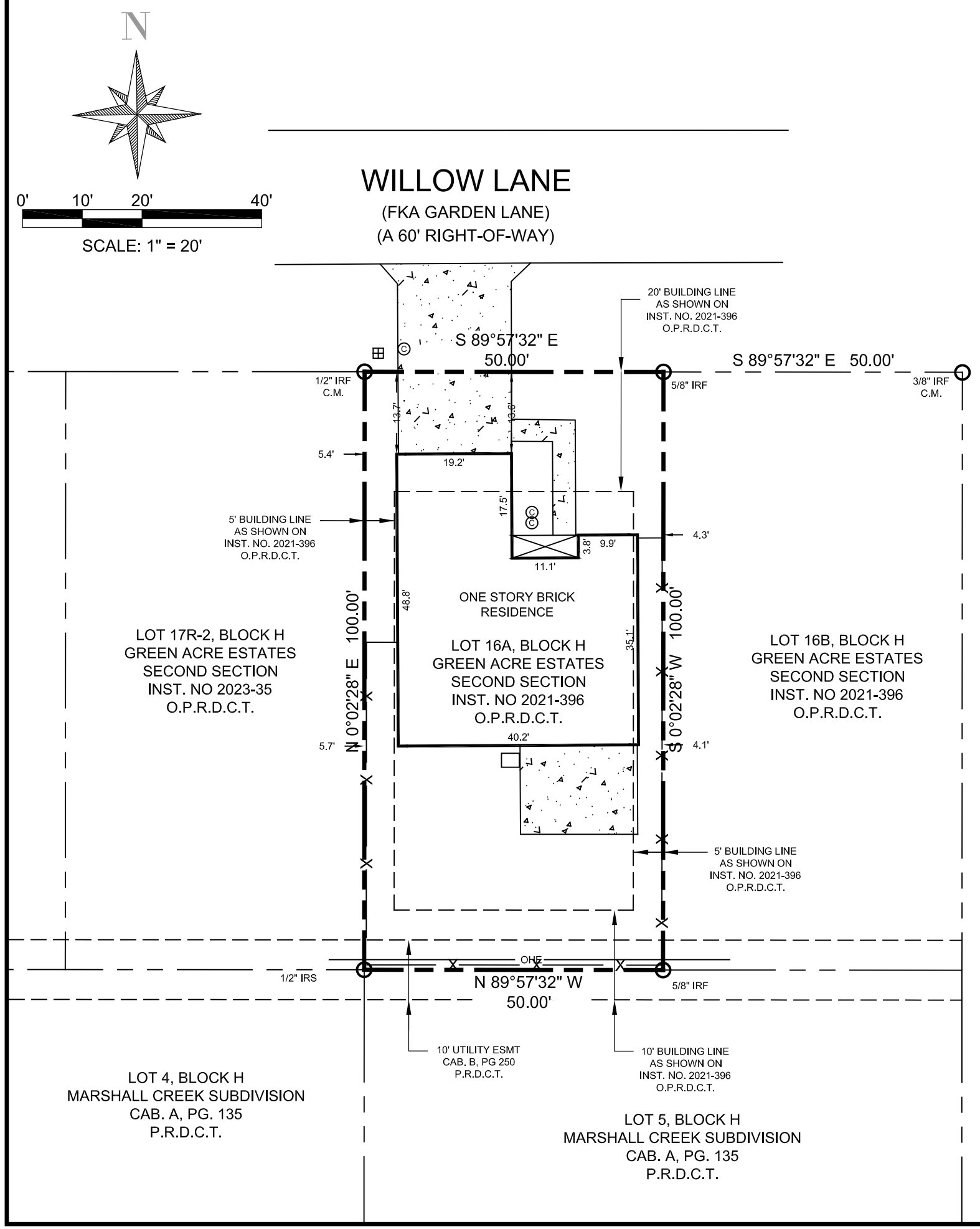

SURVEY PLAT

This is to certify that I have, this date, made an on the ground survey of the property located on 116 Willow Lane in the City of Roanoke, Texas, described as follows:

Lot 16A, Block H, Green Acre Estates, an addition to the City of Roanoke, Denton County, Texas, according to the plat thereof recorded in Instrument No. 2021-396, Official Public Records of Denton County, Texas.

	GAS METER		FIRE HYDRANT
	GAS VALVE		WATER METER
	TELEPHONE PEDESTAL		FUEL PORT
	POWER POLE		WATER VALVE
	DOWN GUY	P	TRANSFORMER PAD
S	S.S. MAN HOLE	E	ELECTRIC BOX
C	CLEAN OUT		TREE
W	MONITERING WELL		SIGN
P	TRAFFIC SIGNAL POLE		LIGHT POLE
T	TRAFFIC SIGNAL BOX	-X-	TYPICAL FENCE
H	SWB MAN HOLE	B	BOLLARD
G	PROPOSED GRATE INLET	PCONC - PROPOSED CONCRETE	
V	VAULT	PNG - PROPOSED NATURAL GROUND	
D	STORM DRAIN MAN HOLE	PPOOL - PROPOSED POOL	

FLOOD CERTIFICATE
As determined by the FLOOD INSURANCE RATE MAPS for Denton County, Texas, the subject property Does Not lie within a Special Flood Hazard Area (100 Year Flood), Map date 09-25-2009 Community Panel No. 48121C0515 G subject lot is located in Zone X.
If this site is not within an identified flood hazard area, this Flood Statement does not imply that the property and/or structures thereon will be free from flooding or flood damage. On rare occasions, greater floods can and will occur and flood heights may be increased by man-made or natural causes. This Flood Statement shall not create liability on the part of the Surveyor.

The plat hereon is a true, correct and accurate representation of the property as determined by an on the ground survey, subject to any and all easements, reservations and restrictions that may be of record, the lines and dimensions of said property being indicated by the plat, the size, location and type of buildings and improvements are as shown, all improvements being within the boundaries of the property set back from property lines the distance indicated, and the distance from the nearest intersection as indicated is as shown on said plat. There are no visible encroachments, conflicts, or protrusions except as shown.

STATE OF TEXAS
REGISTERED
Larry Turman
1740
PROFESSIONAL
LAND SURVEYOR

Larry Turman
Registered Professional Land Surveyor No. 1740

CENTRO RESOURCES, LLC

TBPS No. 10193888

1475 HERITAGE PKWY., STE 217
MANSFIELD, TEXAS 76063

(817) 354-1445
surveygroup@att.net

JOB NO.:	23-029
DATE:	May 3, 2023
SCALE:	########
DRAWN BY:	RM

3x2 RESIDENTIAL RANCH HOUSE

116 WILLOW LANE, ROANOKE, TEXAS 76262.

APPROVED
By chad liford at 10:21 am, Sep 06, 2022

APPROVED
Subject To All
Field Inspections/Approvals

SHEET LIST

#	SHEET NAME
A000	COVER
A100	SITE PLAN
A101	FLOOR PLAN
A102	FOUNDATION PLAN
A103	ROOF PLAN
A105	ELEVATIONS
A106	SECTIONS
E101	ELECTRICAL LIGHTING PLAN
E102	ELECTRICAL POWER PLAN
M101	MECHANICAL PLAN
P101	PLUMBING PLAN

NONYEBUAGU@GMAIL.COM

STATE OF TEXAS
J.L.O. BURGOS ZEPEDA
135702
LICENSED
PROFESSIONAL ENGINEER
TBPE F-21256
IHP ENGINEERING
08-4-22

IHP ENGINEERING
13151 Emily Road, Suite #120, Dallas, TX 75240
p: 214-815-4833 TBPE #F-21256

JOB COPY

ABBRIEVIATIONS

ACT	ACOUSTICAL CEILING TILE
ARCH.	ARCHITECT
ADJ	ADJUSTABLE
AF	ACCESS FLOORING
AFD	AUTOMATIC FIRE DAMPER
AFF	ABOVE FINISH FLOOR
AL/ALUM	ALUMINUM
ALT	ALTERNATE
APC	ARCHITECTURAL PRE-CAST
BLDG	BUILDING
BLK.	BLOCK
BLK'G.	BLOCKING
BLT	BUILT
BM	BEAM
BO	BOTTOM OF
BOT.	BOTTOM
CAB	CABINET
CAP	CAPACITY
C/C	CENTER TO CENTER
CFH	CUBIC FEET/HOUR
CFM	CUBIC FEET/MINUTE
CI	CAST IRON
C.J.	CONTROL JOINT
CL	CLEAR
CLG	CEILING
CMU	CONCRETE MASONRY UNIT
CONTR.	CONTRACTOR
COL	COLUMN
COMP	COMPRESSION/COMPRESSED
CONC	CONCRETE
COND	CONDENSATE
CONST	CONSTRUCTION
CONT	CONTINUOUS
CPLNG	COUPLING
CPT	CARPET
CT	CERAMIC TILE
CTB	CERAMIC TILE BASE
CTR	CENTERS
CL	CENTER LINE
C.S.V.	CRAWL SPACE VENT
C.W.	COLD WATER
D/DIA	DIAMETER
DBL	DOUBLE
DEPT.	DEPARTMENT
DET/DTL	DETAIL
DK	DARK
DN	DOWN
DS	DOWNSPOUT
DWG(S)	DRAWING(S)
EA	EXHAUST AIR
MAINT	MAINTENANCE
MAT'L	MATERIAL
MAX	MAXIMUM
MECH	MECHANICAL
MFR/MFGR	MANUFACTURER
MIN	MINIMUM
MISC	MISCELLANEOUS
MOD.	MODIFIED
MIR	MIRROR
MTD	MOUNTED
MTL	METAL
N/A	NOT APPLICABLE
NF	NATURAL FINISH
NIC	NOT IN CONTRACT
NO. or #	NUMBER
NOM	NOMINAL
NR	NOT RATED
NS	NOT SHOWN
NTS	NOT TO SCALE
OA	OUTSIDE AIR
OBVD	OPPOSED BLADE VOLUME DAMPER
O.C.	ON CENTER
OCEW	ON CENTER EACH WAY
OH	OVERHEAD
OPN'G	OPENING
OPP.	OPPOSITE
OA	OVERALL
P/PT	PAINT
PART'N	PARTITION
PER	PERIMETER
PF	PREFINISH(ED)
PLM/P.LAM.	PLASTIC LAMINATE
PLYWD.	PLYWOOD
PNL	PANEL
PVC	POLYVINYL CHLORIDE
QTY	QUANTITY
R/RAD	RADIUS
RA	RETURN AIR
REF	REFERENCE
REINF	REINFORCED
REQ'D	REQUIRED
RA	RETURN AIR
R.D.	ROOF DRAIN
RM	ROOM
SA	SUPPLY AIR

SYMBOLS LEGEND

1 A101 SIM	BUILDING SECTION		CONCRETE	101	DOOR MARK		EXISTING WALL TO REMAIN
1 A101 SIM	WALL SECTION		BRICK	Name Elevation	LEVEL REFERENCE		EXISTING WALL TO BE DEMOLISHED
REF. A 101 REF.	EXTERIOR ELEVATION		PLYWOOD		NORTH ARROW		PARTITION
REF. A 101 REF.	INTERIOR ELEVATION		INSULATION BATT INSULATION		SPOT ELEVATION	1 View Name 1/8" = 1'-0"	DRAWING TITLE WITH DRAWING SCALE
1 A101 SIM	DETAIL		FINISHED WOOD	**Room name**	ROOM NAME AND NUMBER	1i	WALL TYPE
				1t	WINDOW TYPE		

No.	Description	Date

COVER

Date	02/07/2021
Drawn by	ONYE DESIGNS
Checked by	RD

A000

Scale	As indicated

2/7/2021 9:48:15 PM

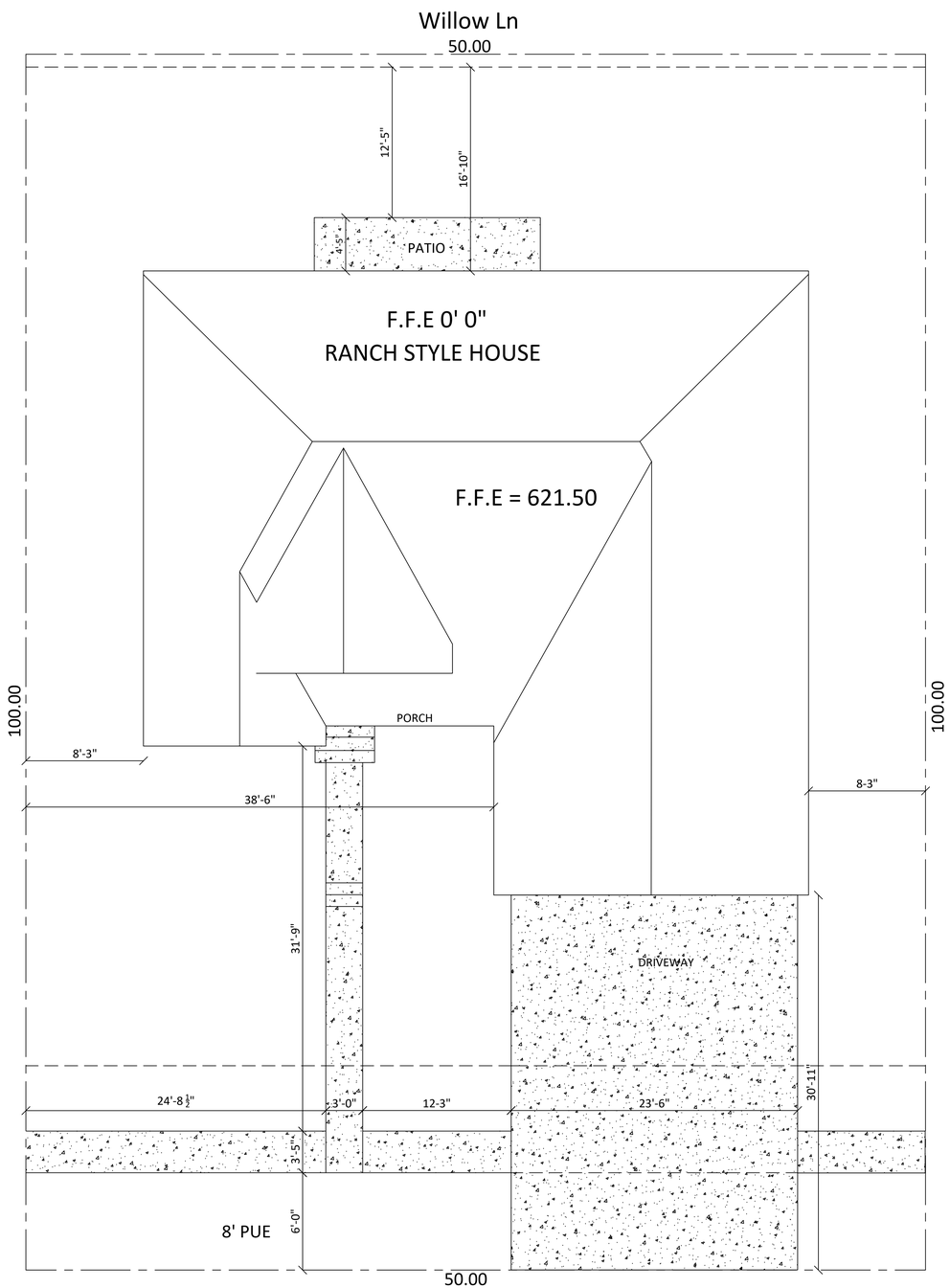

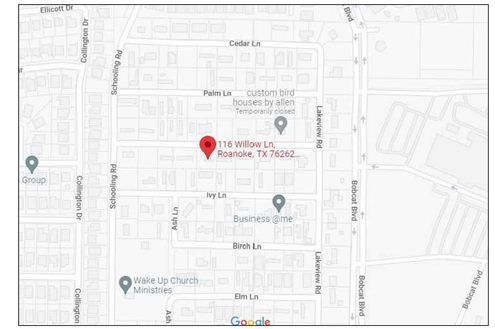

APPROVED
By chad liford at 10:22 am, Sep 06, 2022

APPROVED
Subject To All
Field Inspections/Approvals

JOB COPY

Date: 08/03/2022
Scale: 1/4" = 1'
Drawn By: R.R.
Page: 2

PROJECT:
116 WILLOW LANE,
ROANOKE, TEXAS 76262.

ISSUE RECORD
ISSUED FOR:
DATE:
COMMENTS:
Drawing File: E:\AutoCAD\Willow Lane\116 Willow Lane

STAMP:
STATE OF TEXAS
J.L.O. BURGOS ZEPEDA
135702
LICENSED
PROFESSIONAL ENGINEER
08-4-22

SHEET TITLE:
SITE PLAN

SHEET:
C-1

APPROVED
By chad liford at 10:23 am, Sep 06, 2022

APPROVED
Subject To All
Field Inspections/Approvals

JOB COPY

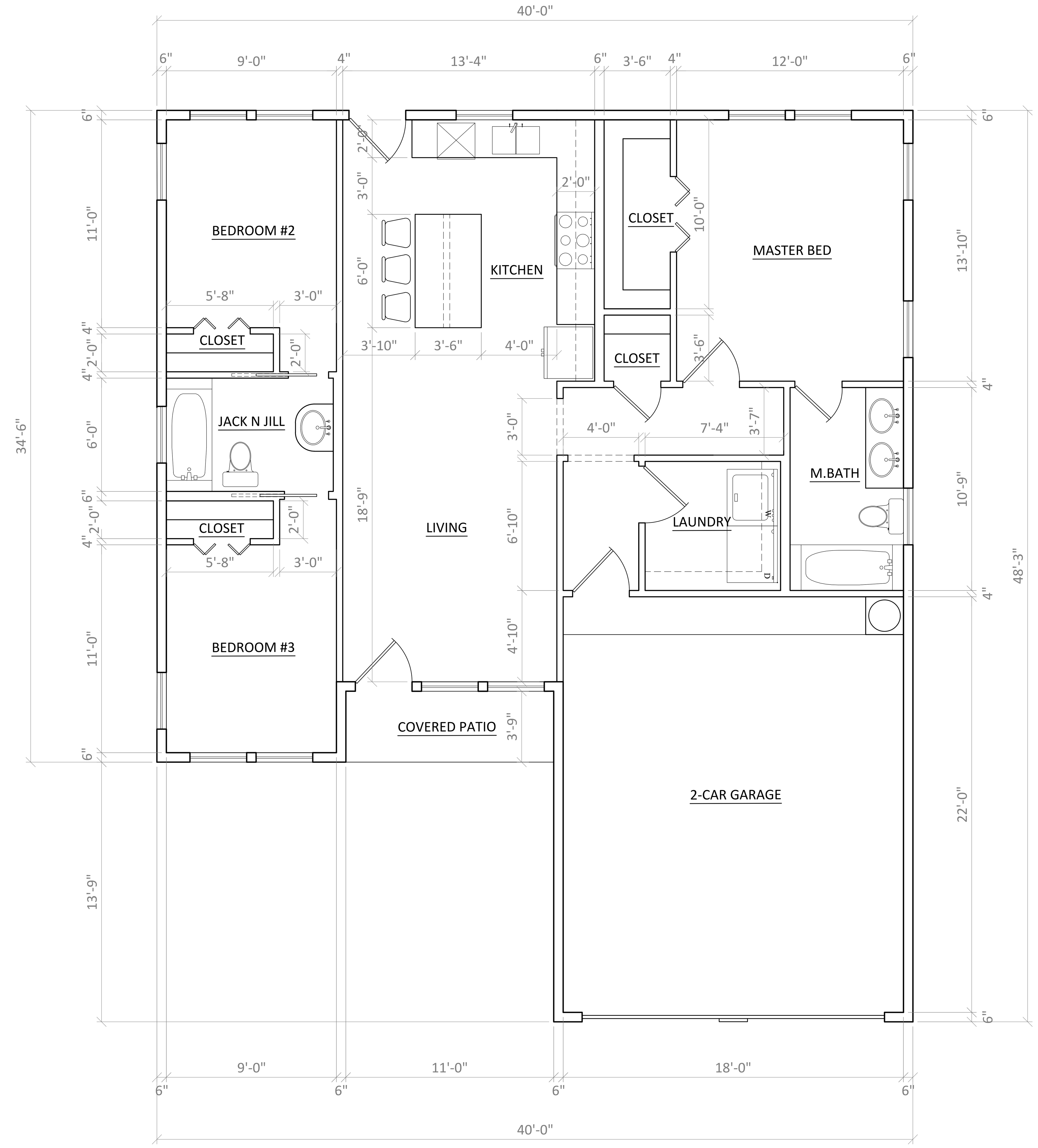

AREA SUMMARY	
INDOOR AREA	1600 Sft
COVERED PATIO	41 Sft
TOTAL AREA COVERED	1641 Sft

① FIRST FLOOR PLAN

0 4' 8' 12'
1/4" = 1'

Date: 07/20/2022
Scale: 1/4" = 1'
Drawn By: R.R.
Page: 1

PROJECT:
116 WILLOW LANE,
ROANOKE, TEXAS 76262.

ISSUE RECORD
DATE: | ISSUED FOR: | COMMENTS:

Drawing File:

STATE OF TEXAS
J.L.O. BURGOS ZEPEDA
135702
LICENSED
PROFESSIONAL ENGINEER
08-4-22

SHEET TITLE:
FLOOR PLAN

SHEET:
A-1

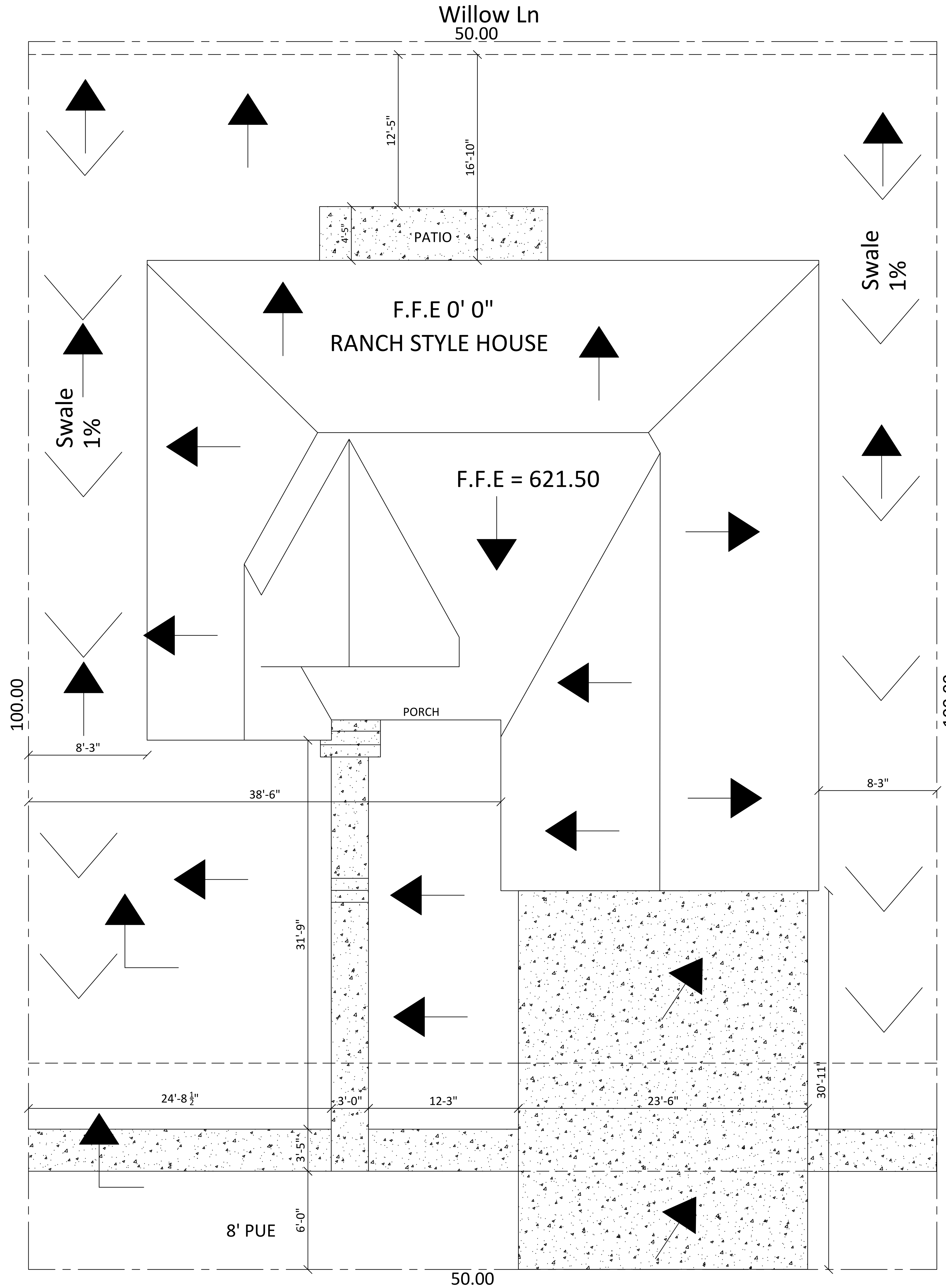

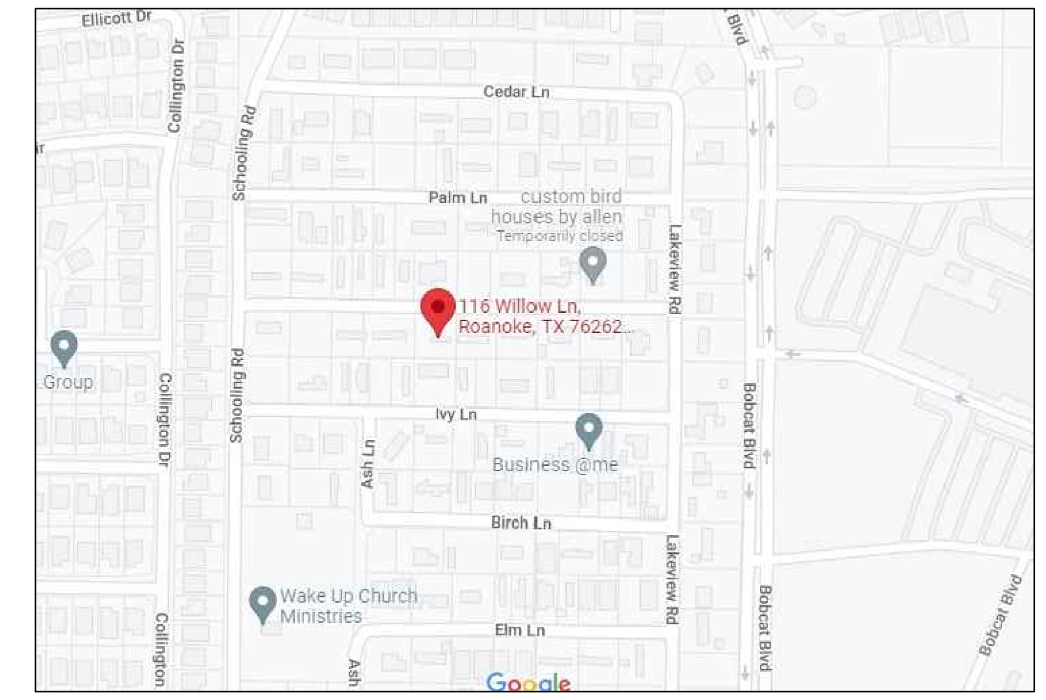

REVISED
10:24 am, Sep 06, 2022

APPROVED
By chad liford at 10:24 am, Sep 06, 2022

APPROVED
Subject To All
Field Inspections/Approvals

JOB COPY

Type A Drainage All Drainage to Street

HYDROLOGIC CALCULATIONS DEVELOPMENT																			
DRAINAGE AREA	AREA (AC.)	Cf	C	Tc (min)	I_1 (IN/HR)	Q_1 (CFS)	Cf	I_2 (IN/HR)	Q_2 (CFS)	Cf	I_5 (IN/HR)	Q_5 (CFS)	Cf	Q_{25} (CFS)	Q_{25} (CFS)	Cf	I_{100} (IN/HR)	Q_{100} (CFS)	REMARKS
A1	0.10	1.00	0.95	15.0	3.894	0.37	1.00	4.224	0.40	1.00	5.514	0.52	1.10	7.782	0.81	1.25	9.762	1.16	Flows to ROW
A2	0.12	1.00	0.95	15.0	3.894	0.44	1.00	4.224	0.48	1.00	5.514	0.63	1.10	7.782	0.98	1.25	9.762	1.39	Flows to ROW
TOTAL DRAINAGE						0.81			0.88			1.15			1.79			2.55	

Date: 08/03/2022
Scale: 1/4" = 1'
Drawn By: R.R.
Page: 2

PROJECT:
116 WILLOW LANE,
ROANOKE, TEXAS 76262.

ISSUE RECORD
DATE: | ISSUED FOR: | COMMENTS:

Drawing File:

STAMP:
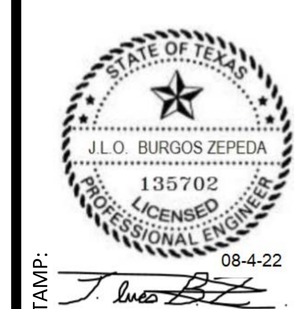

SHEET TITLE:
DRAINAGE PLAN

SHEET:
C-2

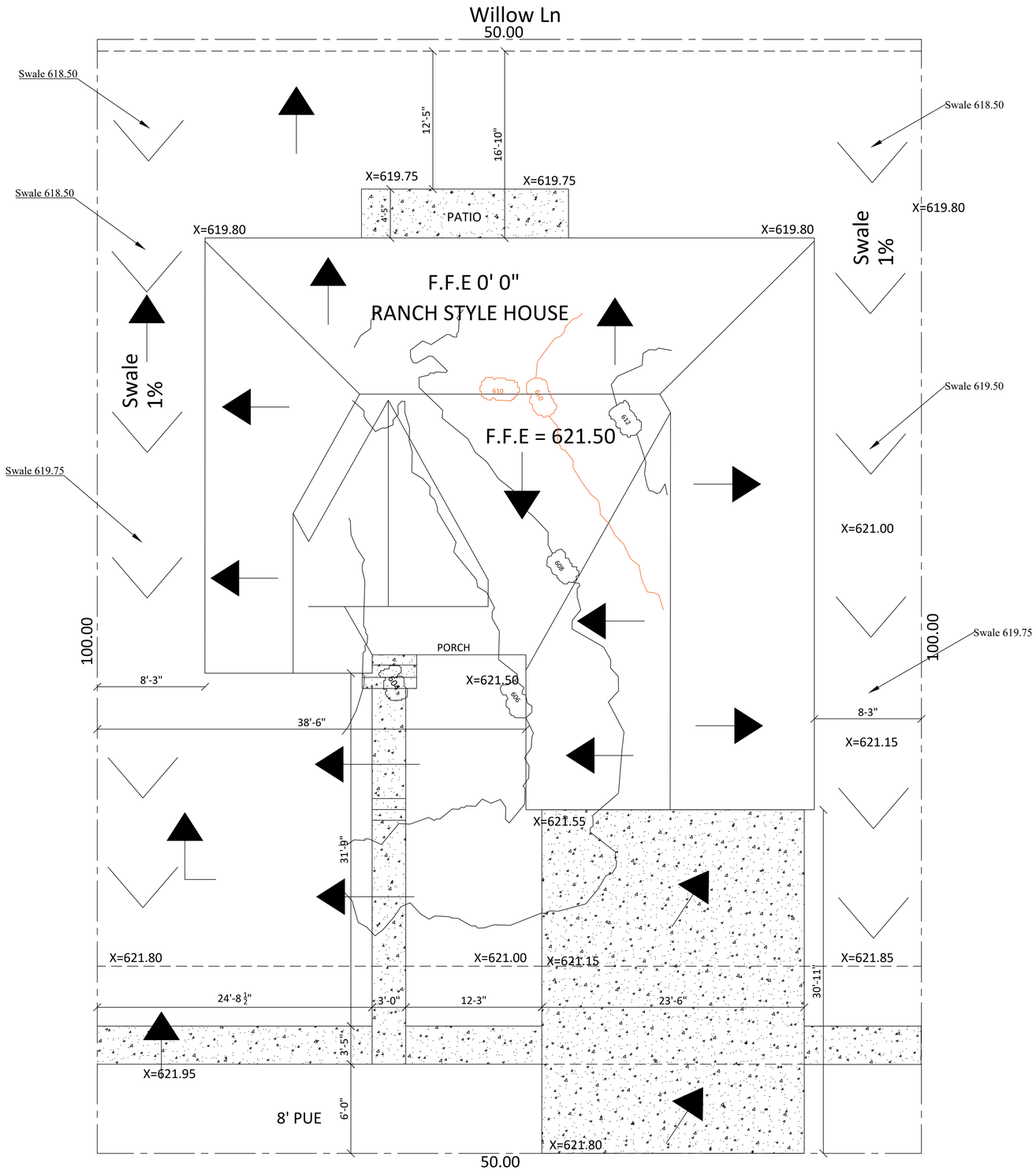

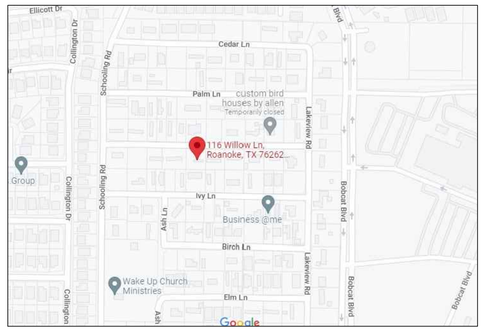

APPROVED
By chad liford at 10:25 am, Sep 06, 2022

APPROVED
Subject To All
Field Inspections/Approvals

JOB COPY

Type A Drainage
All Drainage to Street

Date:	08/03/2022
Scale:	1/4" = 1'
Drawn By:	R.R.
Page:	2

PROJECT:

116 WILLOW LANE,
ROANOKE, TEXAS 76262.

ISSUE RECORD

ISSUED FOR:	DATE:	COMMENTS:

Drawing File: E:\AutoCAD\Willow Lane\116 Willow Lane

STATE OF TEXAS
J.L.O. BURGOS ZEPEDA
135702
LICENSED
PROFESSIONAL ENGINEER
08-4-22

SEAL:

SHEET TITLE:

GRADING PLAN

SHEET:

C-3

APPROVED
By chad liford at 10:25 am, Sep 06, 2022

APPROVED
Subject To All
Field Inspections/Approvals

JOB COPY

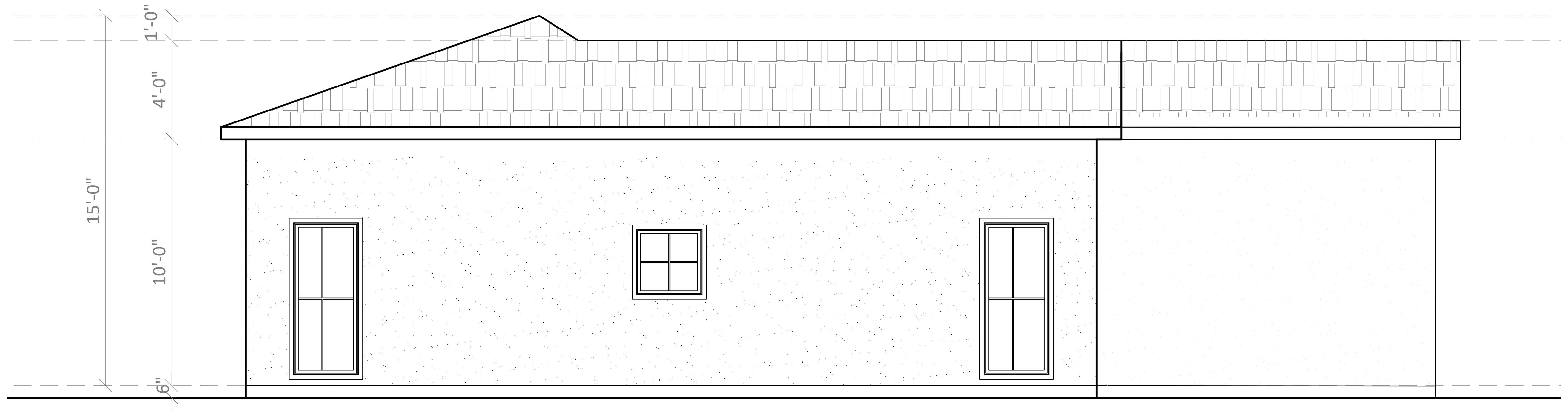

② EXTERIOR ELEVATION : LEFT

0 4' 8' 12'
1/4" = 1'

① EXTERIOR ELEVATION : FRONT

0 4' 8' 12'
1/4" = 1'

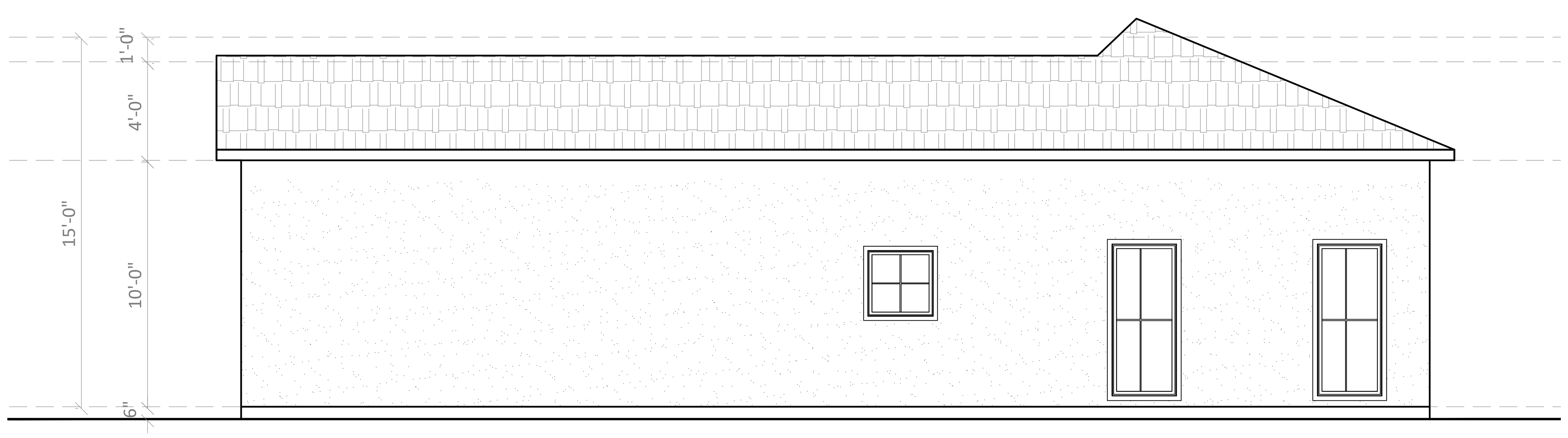

④ EXTERIOR ELEVATION : RIGHT

0 4' 8' 12'
1/4" = 1'

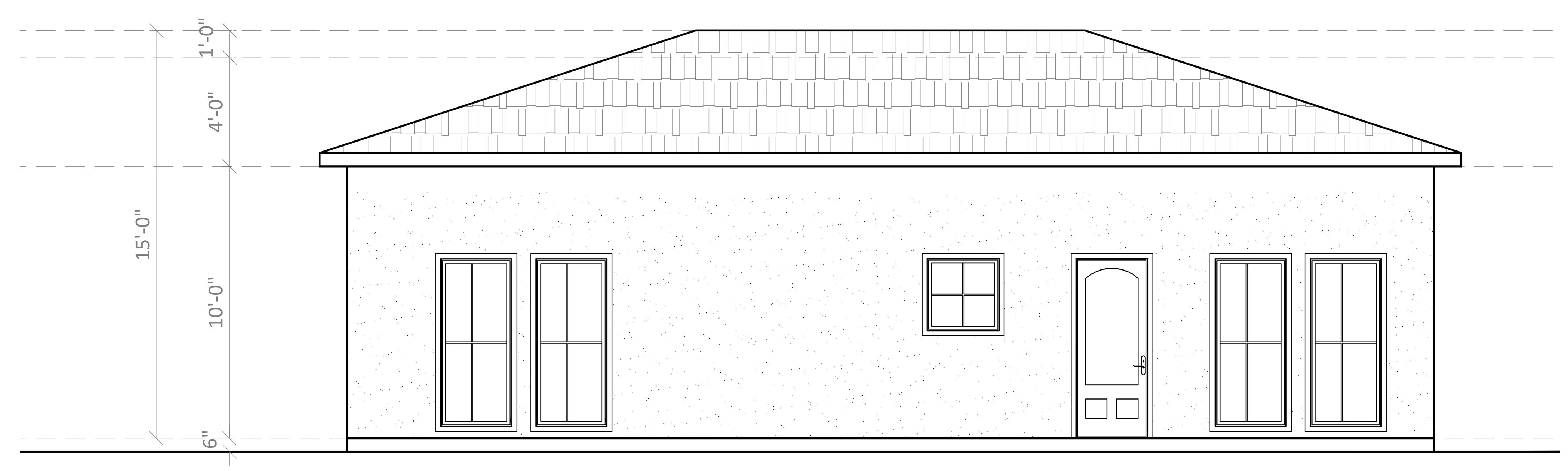

③ EXTERIOR ELEVATION :REAR

0 4' 8' 12'
1/4" = 1'

Date: 07/20/2022
Scale: 1/4" = 1'
Drawn By: R.R.
Page: 2

PROJECT:
116 WILLOW LANE,
ROANOKE, TEXAS 76262.

ISSUE RECORD

DATE:	ISSUED FOR:	COMMENTS:

Drawing File:

STATE OF TEXAS
J.L.O. BURGOS ZEPEDA
135702
LICENSED
PROFESSIONAL ENGINEER
08-4-22

SHEET TITLE:
ENTERIOR ELEVATION

SHEET:
A-2

FOUNDATION NOTES:

Control, Grades, and Elevation:

1. All finished concrete surfaces shall be a minimum of 1 inch above the finished grade.

Any imported fill material utilized to achieve finish sub-grade elevations shall be select fill having a plasticity index of at least 4 but not greater than 12 with no more than 40% passing the no. 200 sieve.

All imported fill shall be placed in 8" maximum loose lifts and compacted to within 98% of standard proctor density at 2 points above optimum moisture content. All soil work must be supervised by a licensed Geotechnical Engineer.

Expansion joints - locate where shown in the details or plan denoted by a bold line.

Control joints - Between each unit and as required.

Compact all sub-grades to 95% S.P.D. at optimum moisture content.

Cusion sand layer beneath concrete flatwork and walks to be 4 inches in depth.

Concrete strength to be 3000 psi at 28 days. Steel rebar strength to be 60,000 psi.

All concrete work should be performed in compliance with the latest edition of ASTM code.

All concrete to be pumped from a delivery truck. Handmixing is unacceptable.

Pier types and quantities are as follows:

Bldg	Pier Type	Quantity	Depth	Diameter
N	I	N/A	N/A min.	N/A

Work required by the Contract Documents for which no separate bid item has been provided in the Bid Proposal, shall be provided for as required by the Contractor. Cost for such work shall be considered subsidiary to the total amount bid. No separate payment will be made for subsidiary work.

Work provided by the Contractor to facilitate the successful completion of the project for which no bid item has been provided, should also be considered as subsidiary to the total amount bid or the item it pertains to.

All work procedures should be supervised by a licensed structural engineer(s) to ensure safety and quality.

Contractor to be covered with all required and industry recommended insurance coverages.

Contractor to follow all required ACI, ASCI, ASTM, and IBC codes.

Excavation and Construction work to be performed during the dry season.

The foundation design is based on the soil test (geotechnical subsurface investigation).

APPROVED
By chad liford at 10:25 am, Sep 06, 2022

APPROVED
Subject To All
Field Inspections/Approvals

JOB COPY

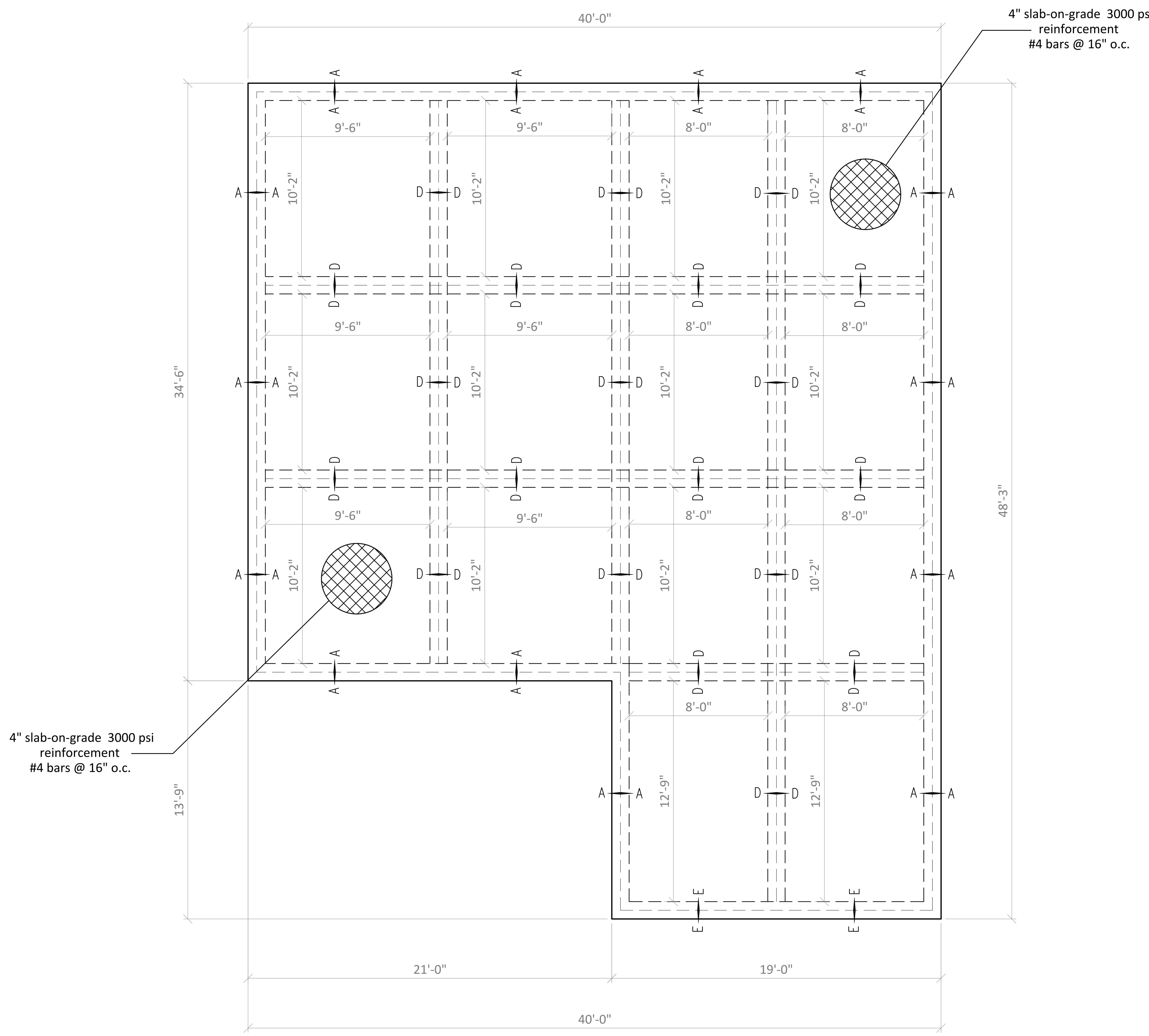

① FOUNDATION PLAN

0 4' 8' 12'
1/4" = 1'

Date: 07/20/2022
Scale: 1/4" = 1'
Drawn By: R.R.
Page: 4

PROJECT: 116 WILLOW LANE, ROANOKE, TEXAS 76262.

ISSUE RECORD

DATE:	ISSUED FOR:	COMMENTS:

Drawing File:

STATE OF TEXAS
J.L.O. BURGOS ZEPEDA
135702
LICENSED PROFESSIONAL ENGINEER
08-4-22

SHEET TITLE: FOUNDATION PLAN

SHEET: S-1

APPROVED
By chad liford at 10:26 am, Sep 06, 2022

APPROVED
Subject To All
Field Inspections/Approvals

JOB COPY

A–A PERIMETER BEAM

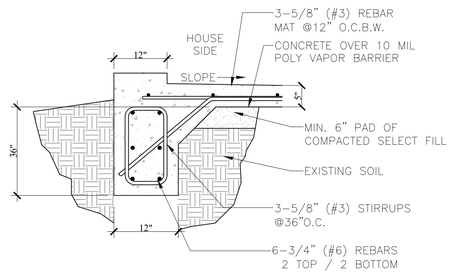

B–B GARAGE PERIMETER BEAM

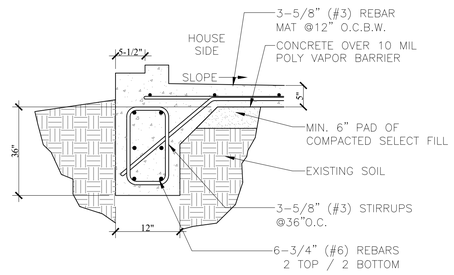

D–D INTERIOR BEAM

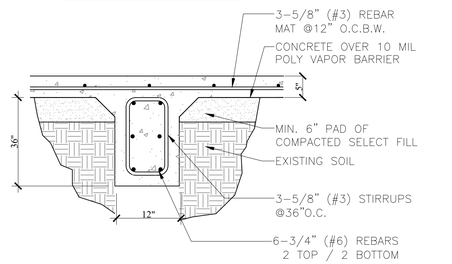

E–E GARAGE DOOR BEAM

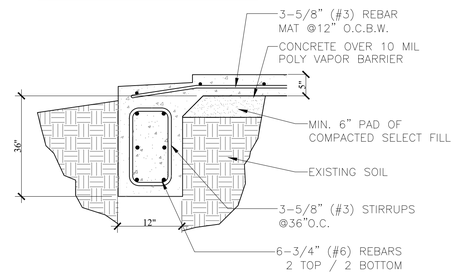

G–G BRICK LEDGE PERIMETER BEAM

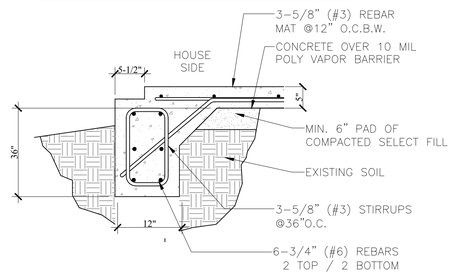

H–H GARAGE/PORCH INTERIOR BEAM

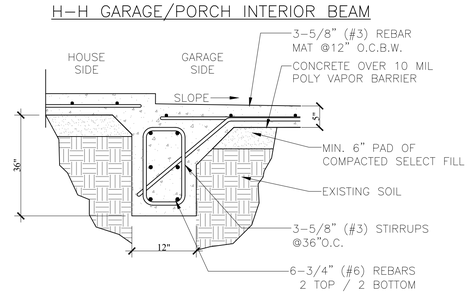

PROJECT:
116 WILLOW LANE,
ROANOKE, TEXAS 76262.

Date: 07/20/2022
Scale: 1/4" = 1'
Drawn By: R.R.
Page: 5

ISSUE RECORD

DATE:	ISSUED FOR:	COMMENTS:

Drawing File: D:\Revit\R. ARCHITECTS\JOJO LA Willow Lane - Central_R21.rvt

STATE OF TEXAS
J.L.O. BURGOS ZEPEDA
135702
LICENSED
PROFESSIONAL ENGINEER
08-4-22

SHEET TITLE:
FOUNDATION BEAM DETAILS

SHEET:
S-2

FRAMING NOTES:

Stud Walls:
1. All exterior wall studs shall be 2"x6" at 16" on centers unless noted otherwise.
2. All interior wall studs shall be 2"x4" at 16" on centers, with 5/8" gypsum board on both sides, unless noted otherwise.

Columns, Beams and Headers:
3. All columns are to be wood 4(2x4), unless noted otherwise.
4. Beam to Column connections to use Simpson Strong-Tie LCE4 or equal.
5. All headers (H) are to be - (2) 2x10 unless noted otherwise.

Shear Walls, Deck, & Trusses:
6. Continuously sheathed wood structural panel method used. Minimum sheathing thickness is 1/2".
7. Roof deck to be 3/4" exterior grade plywood sheathing.
8. All roof rafters shall be 2"x6", unless noted otherwise.
9. Roof members to be spaced a maximum of 2'-0" on centers.
10. All connector plates to be 16 ga. Simpson Strong-Tie or approved equal. See details for nailing patterns.

General Notes:
11. Contractor must verify all of the dimensions prior to construction.
12. It is the contractor's responsibility to provide any and all shop drawings and ask for Owner/Engineer approval prior to construction.
13. Work required by the Contract Documents for which no separate bid item has been provided in the Bid Proposal, shall be provided for as required by the Contractor. Cost for such work shall be considered subsidiary to the total amount bid. No separate payment will be made for subsidiary work.
14. Work provided by the Contractor to facilitate the successful completion of the project for which no bid item has been provided, shall also be considered as subsidiary to the total amount bid or the item it pertains to.
15. All work procedures should be supervised by a licensed structural engineer(s) to ensure safety and quality.
16. Contractor to be covered with all required and industry recommended insurance coverages.
17. Contractor to follow all required ACI, ASCI, ASTM, and IBC codes.
18. The design engineer's and design company's liability is strictly limited to the actual amount received from the clients as compensation for the design work. Any liability or responsibility beyond such amount is herewith declined and abjured. Clients acknowledge and accept such liability declination through their receipt of or payment for design/inspection work.

WALL BRACING NOTES
1. All wall bracing to comply with 2015 IRC or newer building code currently adopted by city Install bracing panels as noted on attached sketch according to details shown on this page..
2. Nail "Red" Thermoply with 1-1/4" galvanized roofing nails or 16 guage 7/16" min. crown staples spaced 3" o.c. on all panel edges and 6" o.c. in the field.

CEILING BEAM SIZES
1-2x10 @ 20" o.c.
2- 2x12 @ 16" o.c.
3-2x10 @ 16" o.c.

KEY NOTES:
H-1 = HEADER, 2-2x8
H-2 = HEADER, 2-2x10
H-3 = HEADER, 2-2x12
H-4 = HEADER, 3-2x12

① FRAMING PLAN

0 4' 8' 12'
1/4" = 1'

APPROVED
By chad liford at 10:26 am, Sep 06, 2022

APPROVED
Subject To All
Field Inspections/Approvals

JOB COPY

Date: 07/20/2022
Scale: 1/4" = 1'
Drawn By: R.R.
Page: 6

PROJECT:
116 WILLOW LANE,
ROANOKE, TEXAS 76262.

ISSUE RECORD

DATE:	ISSUED FOR:	COMMENTS:

Drawing File:

STATE OF TEXAS
J.L.O. BURGOS ZEPEDA
135702
LICENSED PROFESSIONAL ENGINEER
08-4-22

SHEET TITLE: FRAMING PLAN

SHEET: S-3

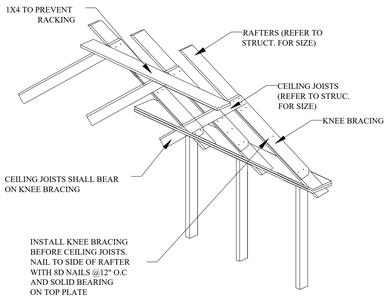

1 GAMBREL CEILING KNEE BRACE (TYP.)
N.T.S.

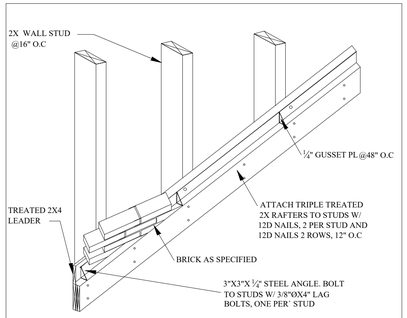

2 SECTION (TYP.)
N.T.S.

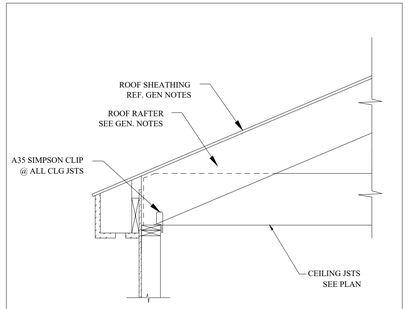

3 TYP SEC @ EXTERIOR WALL
N.T.S.

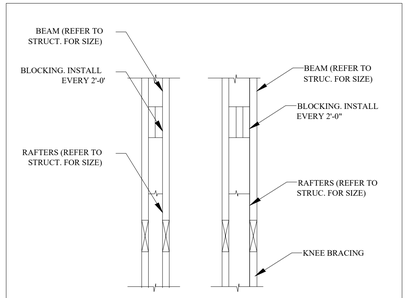

4 DETAIL
N.T.S.

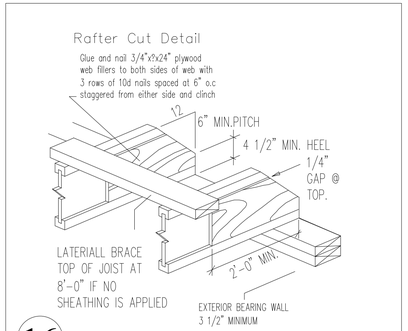

16 TYP. RAFTER CUT DETAL
N.T.S.

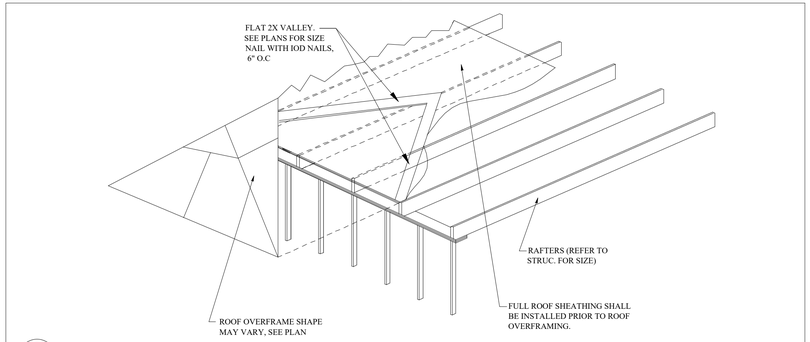

5 ROOF OVERFRAME INSTALLATION (TYP.)
N.T.S.

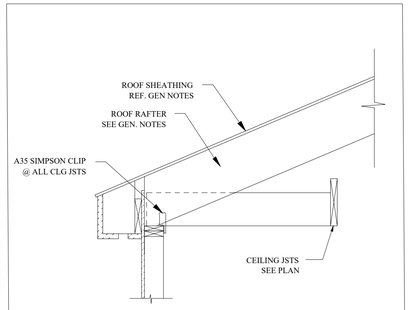

6 TYP SEC @ EXTERIOR WALL
N.T.S.

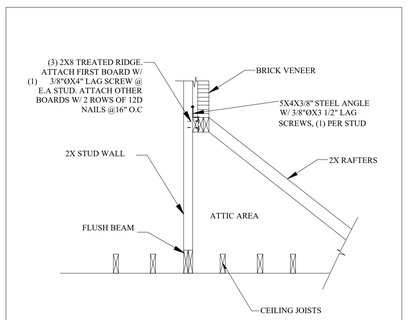

7 DETAIL
N.T.S.

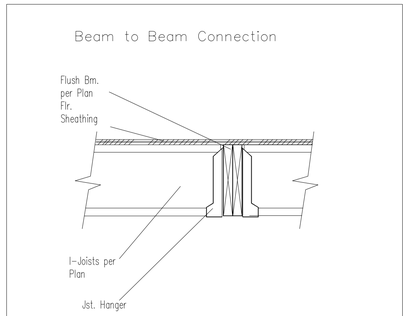

17 TYP. BEAM TO BEAM CONNECTION DETAIL
N.T.S.

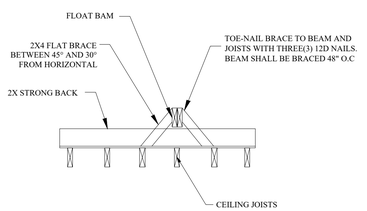

8 LATERAL BRACING OF FLOAT BEAM (TYP.)
N.T.S.

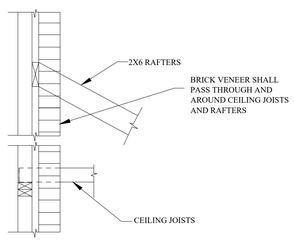

9 DETAIL
N.T.S.

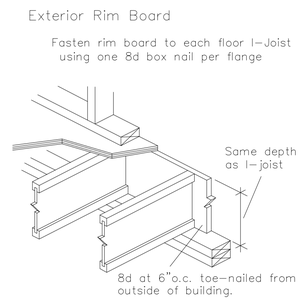

10 EXTERIOR RIM BOARD
N.T.S.

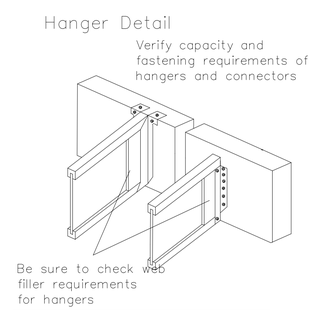

11 TYP. HANGER DETAIL
N.T.S.

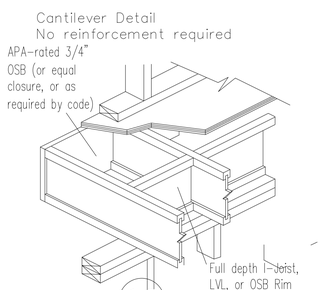

12 TYP. CANTILEVER DETAL
N.T.S.

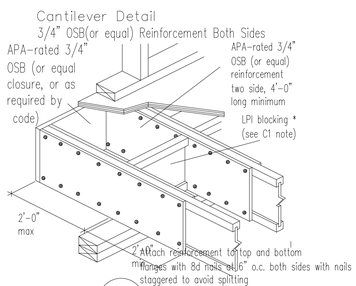

13 TYP. CANTILEVER DETAL
N.T.S.

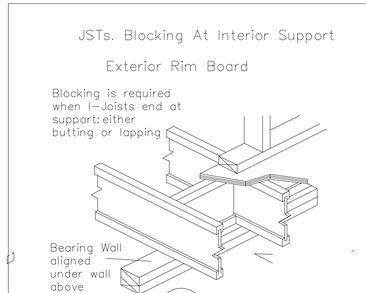

14 TYP. JST. BLOCKING DETAL
N.T.S.

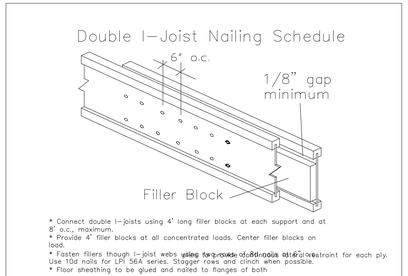

15 TYP. DOUBLE JST. NAILING DETAL
N.T.S.

JOB COPY

APPROVED
Subject To All
Field Inspections/Approvals

APPROVED
By chad liford at 10:26 am, Sep 06, 2022

Date: 07/20/2022
Scale: 1/4" = 1'
Drawn By: R.R.
Page: 7

PROJECT:
116 WILLOW LANE,
ROANOKE, TEXAS 76262.

ISSUE RECORD
ISSUED FOR: | DATE: | COMMENTS:

Drawing File: D:\Work\RR ARCHITECTS\EDC\116 Willow

STATE OF TEXAS
JLO BURGOS ZEPEDA
135702
LICENSED
PROFESSIONAL ENGINEER
08-4-22

SHEET TITLE:
FRAMING DETAILS

SHEET:
S-4

BUILDING LAYOUT NOTES:

Control, Grades, and Elevation:

1. All finished concrete surfaces shall be a minimum of 1 inch above the finished grade.
2. All accessible routes must meet current T.A.S. (Texas Accessibility Standards). Contractor must be familiar and comply with all of the T.A.S. standards as they pertain to this project.

Veneer Walls (Stone, CMU, Brick, and Stucco):

4. Stone: 4in. full veneer limestone, Sonoma cut, ashlar stacked.
5. Brick: Modular 4in. veneer, Grade SW brick, alternately stacked (unless noted otherwise).
6. Stucco: Standard three coat with fine texture finish. Control joints according to elevations, 20' o.c. max.
7. Place ladder type horizontal reinforcement at every other course.
8. Mortar joints: all joints shall be a tuck point concave tooled joint with a 3/8" width.
9. Construction Joints: Vertical masonry movement joints to be 20' o.c. max, unless noted otherwise, and shall not cross lintels or brick shelf angles.
10. Cutting of masonry blocks: all cutting, trimming, or shaping shall be done by a motorized masonry saw. Breaking or splitting will not be accepted.
11. Weep holes: Provide at 24" o.c. at the base of the masonry facade one course above the foundation and immediately above all other flashing.
12. Flashing: Provide stainless steel flashing at the base of the masonry facade one course above the foundation. Provide flashing above all bond beams and openings.
13. Sealant: All masonry surfaces to be coated with Behr Premium Waterproofer and Protector No. 980 or equivalent.

Light Gauge Stud Walls:

16. Metal Studs: All interior studs to be hot deep galvanized, 16 gauge, metal studs at 16" o.c. (ASTM A525).
17. Fasteners: All stud screws and fasteners to be stainless steel with neoprene washers.
18. Sheathing: All interior sheathing used in the space shall be a minimum 5/8" thick gypsum board. Gyp board on interior side of restroom and kitchen walls to be water proof.

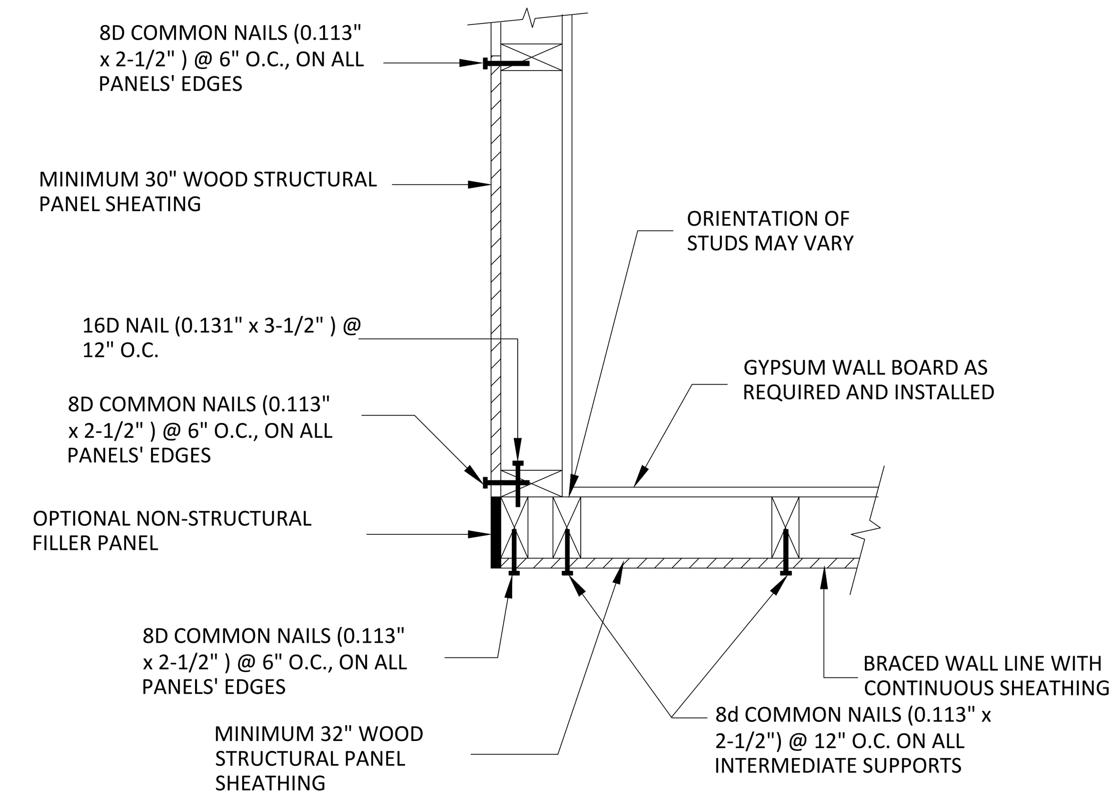

(A) OUTSIDE CORNER DETAIL
SCALE: N.T.S

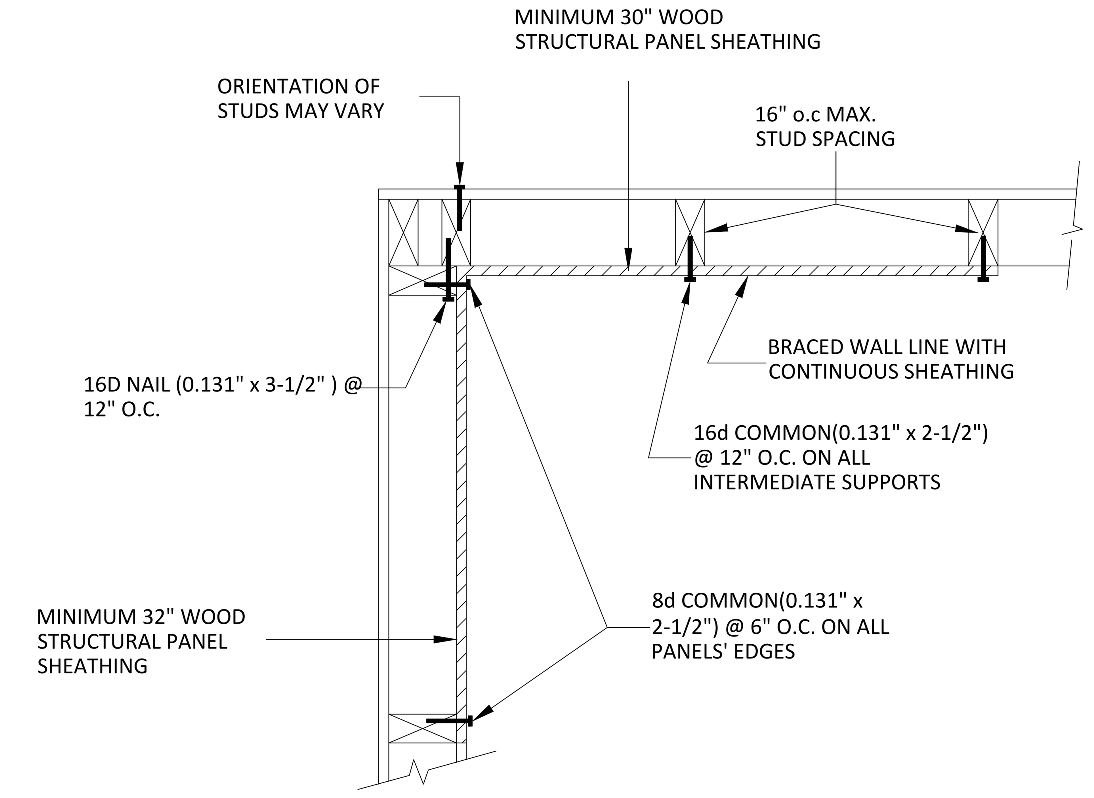

(B) INSIDE CORNER DETAIL
SCALE: N.T.S

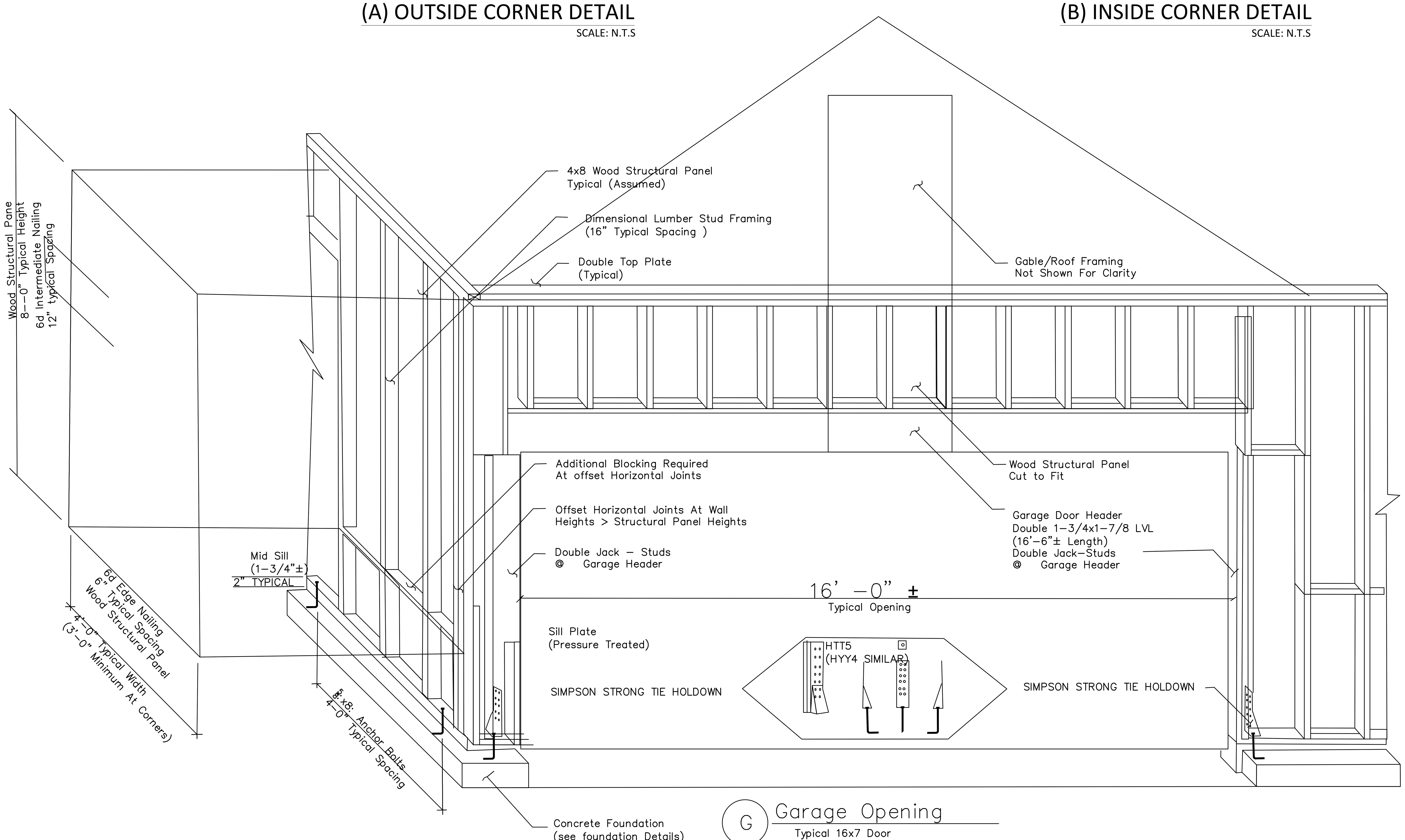

G Garage Opening
Typical 16x7 Door

JOB COPY

APPROVED
Subject To All
Field Inspections/Approvals

APPROVED
By chad liford at 10:27 am, Sep 06, 2022

Date: 07/20/2022
Scale: 1/4" = 1'
Drawn By: R.R.
Page: 8

PROJECT: 116 WILLOW LANE, ROANOKE, TEXAS 76262.

ISSUE RECORD
DATE: | ISSUED FOR: | COMMENTS:

Drawing File:

STATE OF TEXAS
J.L.O. BURGOS ZEPEDA
135702
LICENSED
PROFESSIONAL ENGINEER
08-4-22

SHEET TITLE: FRAMING DETAILS

SHEET: S-5

ELECTRICAL LAYOUT NOTES:

Wiring and Conduits:

1. All work shall be done in conformance with all governing codes, including amendments, bulletins, etc. as well as standards of installation for buildings, and equipment and requirements of the Owner.
2. Coordinate all work with other trades to ensure installation is made in accordance with the contract documents.
3. Exact locations and mounting heights of all lighting fixtures, wall outlets, etc. shall be in accordance with the Architectural drawings.
4. All light fixtures shall be specified on the Electrical and/or Architectural drawings.
5. Contractor to be covered with all required, and industry recommended, insurance coverages.
6. Work required by the Contract Documents for which no separate bid item has been provided in the Bid Proposal, shall be provided for as required by the Contractor. Cost for such work shall be considered subsidiary to the total amount bid. No separate payment will be made for subsidiary work.
7. Work provided by the Contractor to facilitate the successful completion of the project for which no bid item has been provided, should also be considered as subsidiary to the total amount bid or the item it pertains to.

POWER LEGENDS

- 120V, 20A Duplex Receptacle
- wp — 120V, 20A Duplex Receptacle Waterproof
- GFCI — 120V, 20A GFCI Receptacle
- 120V, 20A Duplex Dedicated Receptacle
- 240V, 30A Dedicated Dryer Receptacle
- Plaster Ring & Pull String for Telephone and Data
- TV — Plaster Ring & Pull String for Cable TV
- Single Pole Switch
- 3 — Three way Pole Switch
- Dimmer Pole Switch

ELECTRICAL LEGEND

- A — 6" LED Down, R.A.B., ND6R26D & NDLED6RD-50YY-S-W, 10w
- B — 4" Down, Lithonia Lighting, LK3BMW LED M4, 8w
- C — 6" LED Down, R.A.B., ND6R26D & NDLED6RD-50YY-S-W, 10w
- D — Bathroom Sconce
- P — Pendant, Progress Lighting, P500051-143, 8.5w
- F — Smoke Detector
- Exterior Light - Projection
- G — 1x4 LED Panel, Feit Electric, 71802, 45w
- H — 5" Up/Down, Progress Lighting, P5675-82/30K, (2)16w
- I — Chandelier, Progress Lighting, Alexa P4458-09, (3)32w
- CF — Home Decorators Collection, Nepal YG556-CH, (1)21w
- EF — Exhaust Fan

PANEL SCHEDULE (PROPOSED)

PANEL: 'A'			OC DEVICE TYPE: BREAKER					ENCLOSURE: NEMA 1			MAINS (A): 200A MLO	
LOCATION: AS SHOWN ON THE PLANS. ELEC CONT.			DEVICE PLUG-IN					MOUNTING: SURFACE			WIRING: 3PH, 4WIRE	
FED FROM: SERVICE DISCONNEECT			MODEL : SQUARE D OR EQUAL					VOLTAGE : 120/208V				
BKR SIZE	NOTES	DESCRIPTION	LOAD (VA)	CKT NO.	PHASE A	LOADS PHASE B	PHASE C	CKT NO.	LOAD (VA)	DESCRIPTION	NOTES	BKR SIZE
20A/1P	GARAGE + EXTERIOR	LIGHTING	146	1	1338			2	1192	LIGHTING	GENERAL	20A/1P
20A/1P	BATH ROOM REC	RECEPTACLE	720	3		1305		4	585			
20A/1P	MASTER BED	RECEPTACLE	720	3		1305		4	585	LIGHTING	GENERAL	20A/1P
20A/1P	BERDROOMS 1 TO 3	RECEPTACLE	1260	5			2020	6	760	LIGHTING	GENERAL	20A/1P
20A/1P	OFFICE-STUDIO -HALL	RECEPTACLE	1260	5			2020	6	760	LIGHTING		
20A/1P	LIVING ROOM DINING	RECEPTACLE	1080	7	5080			8	4000	MAU-1	MAKE UP AIR UNIT	30A/2P
30A/2P	A/C UNIT	AHU-1	3000	9		7000		10	4000	***	***	***
***	***	***	3000	11			3950	12	950	BATHROOM EXHAUST FA	KEF-1	30A/2P
20A/1P	WATER HEATER WH-1	RECEPTACLE	1500	13	2450			14	950	***	***	***
30A/2P	A/C UNIT	CU-1	4500	15		5000		16	500			
30A/2P	A/C UNIT	CU-1	4500	15		5000		16	500	RECEPTACLE	EQUIPMENT	20A/1P
***	***	***	4500	17			5000	18	500	RECEPTACLE	COMPUTER	20A/1P
20A/1P	TV AND OTHER	RECEPTACLE	1260	19	2340			20	1080	RECEPTACLE	TV AND OTHER	20A/1P
20A/1P	FRESH AIR FAN	FAF-1	750	21		2250		22	1500	RECEPTACLE	WATER HEATER WH-2	20A/1P
30A/1P	SPARE	RECEPTACLE	1000	23			2000	24	1000	RECEPTACLE	SPARE	30A/1P
30A/1P	SPARE	RECEPTACLE	1000	23	2000			24	1000	RECEPTACLE	SPARE	30A/1P
	KVA	AMPS	PHASE TOTALS	VA		AMPS						
			PHASE A:		13208	110.07						
			PHASE B:		15555	129.63						
TOTAL	41.733	115.93	PHASE C:		12970	108.08				INSTALLED	200 AMPS	

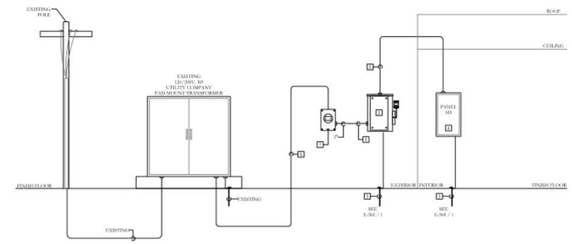

③ ELECTRICAL SCHEMATIC DIAGRAM
SCALE: NTS

KEYED NOTES:

1. EXISTING ELECTRIC METER. ELECTRICAL CONTRACTOR SHALL COORDINATE METER SOCKET CONFIGURATION WITH UTILITY COMPANY.
2. PROPOSED 200A, 208V, 3Ø, 150A FUSED, NEMA-3R, MAIN DISCONNECT SWITCH TO SERVE WIRING LUGS INSIDE WIREWAY. NOTE: UTILITY COMPANY SHALL PROVIDE VANDAL RESISTANT SEAL ON DISCONNECT. COORDINATE REQUIREMENT WITH UTILITY COMPANY. ELECTRICAL CONTRACTOR TO VERIFY FUSED CURRENT CAPACITY.
3. PROVIDE AND INSTALL A NEW GROUNDING ROD PER N.E.C.
4. ELECTRICAL PANEL BOARD. REFER TO PANEL SCHEDULES FOR FURTHER INFORMATION.
5. PROVIDE ONE (1) SET EACH WITH: 4-#3/0'S COPPER, 1-#6'S GROUND COPPER, IN 2-1/2" CONDUIT.
6. PROVIDE ONE (1) SET EACH WITH: 4-#3/0S COPPER, IN 3" CONDUIT.

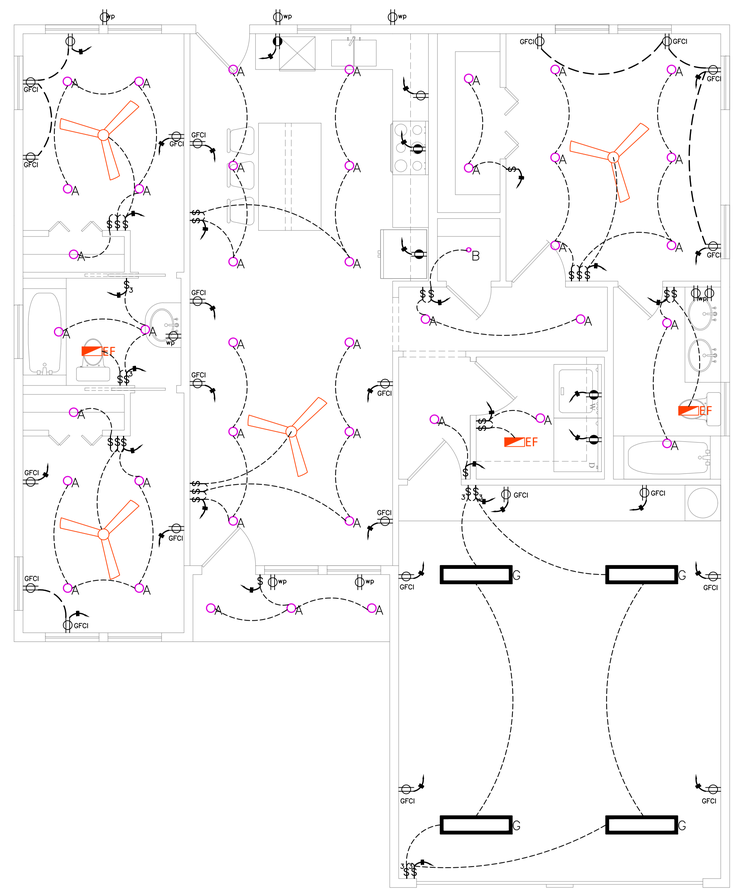

JOB COPY

APPROVED
Subject To All
Field Inspections/Approvals

APPROVED
By chad liford at 10:27 am, Sep 06, 2022

① ELECTRICAL PLAN (LIGHTING & POWER)

0 4' 8' 12'
1/4" = 1'

Date: 07/20/2022
Scale: 1/4" = 1'
Drawn By: R.R.
Page: 3

PROJECT:
116 WILLOW LANE,
ROANOKE, TEXAS 76262.

ISSUE RECORD
ISSUED FOR: | DATE: | COMMENTS:
Drawing File:

STATE OF TEXAS
J.L.O. BURGOS ZEPEDA
135702
LICENSED
PROFESSIONAL ENGINEER
08-4-22

SHEET TITLE: ELECTRICAL PLAN

SHEET: E-1

APPROVED
By chad liford at 10:27 am, Sep 06, 2022

APPROVED
Subject To All
Field Inspections/Approvals

JOB COPY

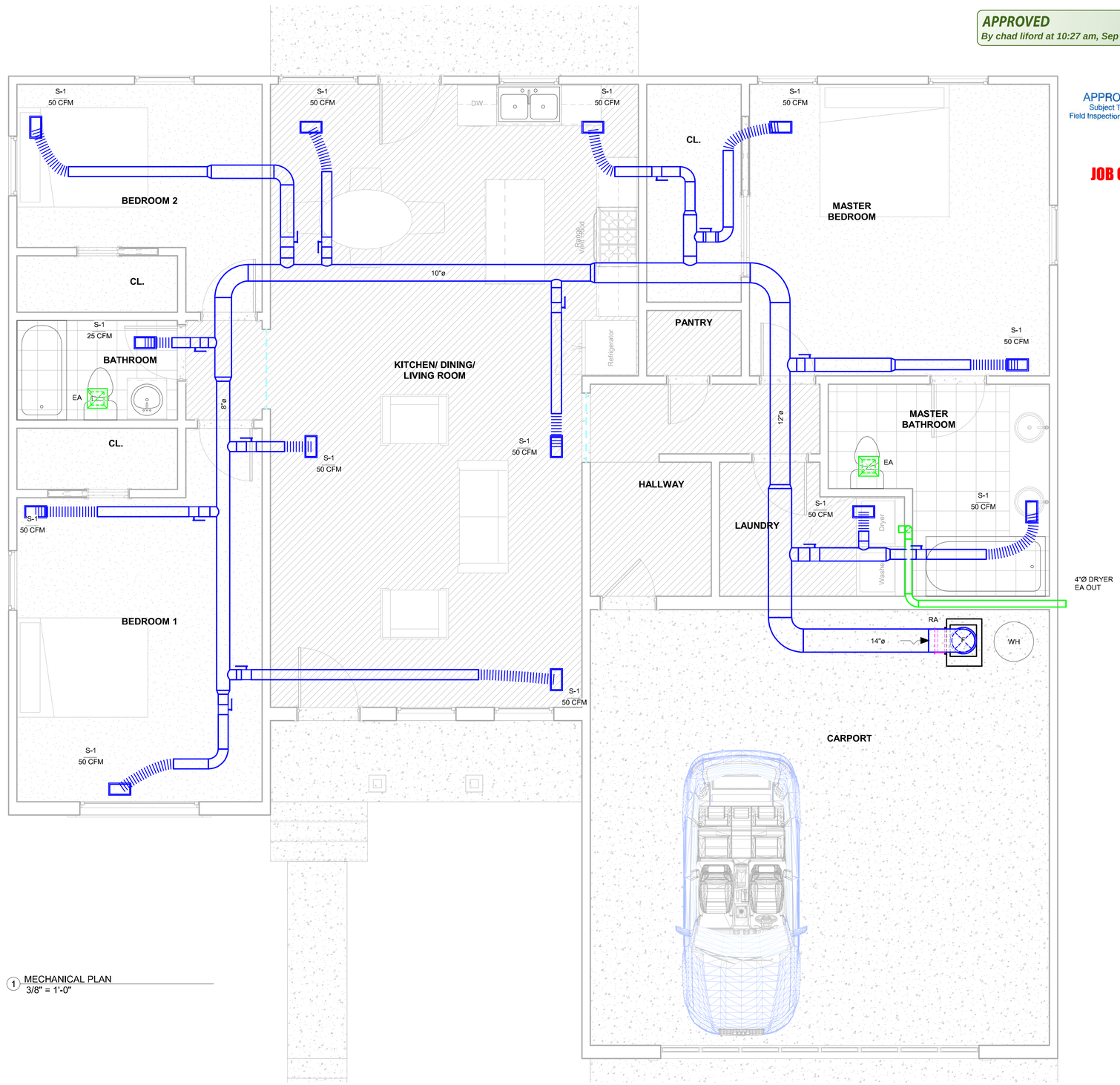

1 MECHANICAL PLAN
3/8" = 1'-0"

NONYEBUAGU@ONYEDESIGNS.COM

STATE OF TEXAS
J.L.O. BURGOS ZEPEDA
135702
LICENSED
PROFESSIONAL ENGINEER
TBPE F-21256
IHP ENGINEERING
08-4-22

No.	Description	Date

MECHANICAL PLAN

Date	02/07/2021
Drawn by	ONYE DESIGNS
Checked by	RD

M101

Scale 3/8" = 1'-0"

2/7/2021 9:38:59 PM

APPROVED
By chad liford at 10:27 am, Sep 06, 2022

APPROVED
Subject To All
Field Inspections/Approvals

JOB COPY

RISER DIAGRAM STANDARD BATHROOM

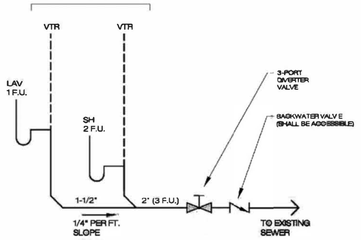

Plumbing Vents:

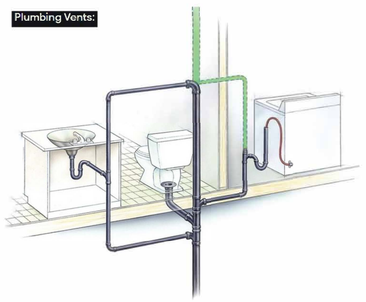

Typical Installation

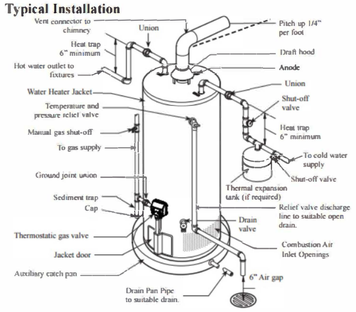

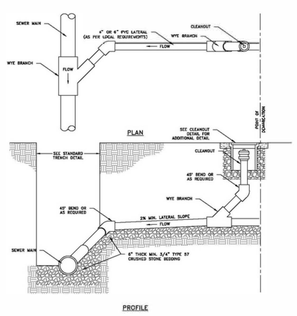

SANITARY SEWER

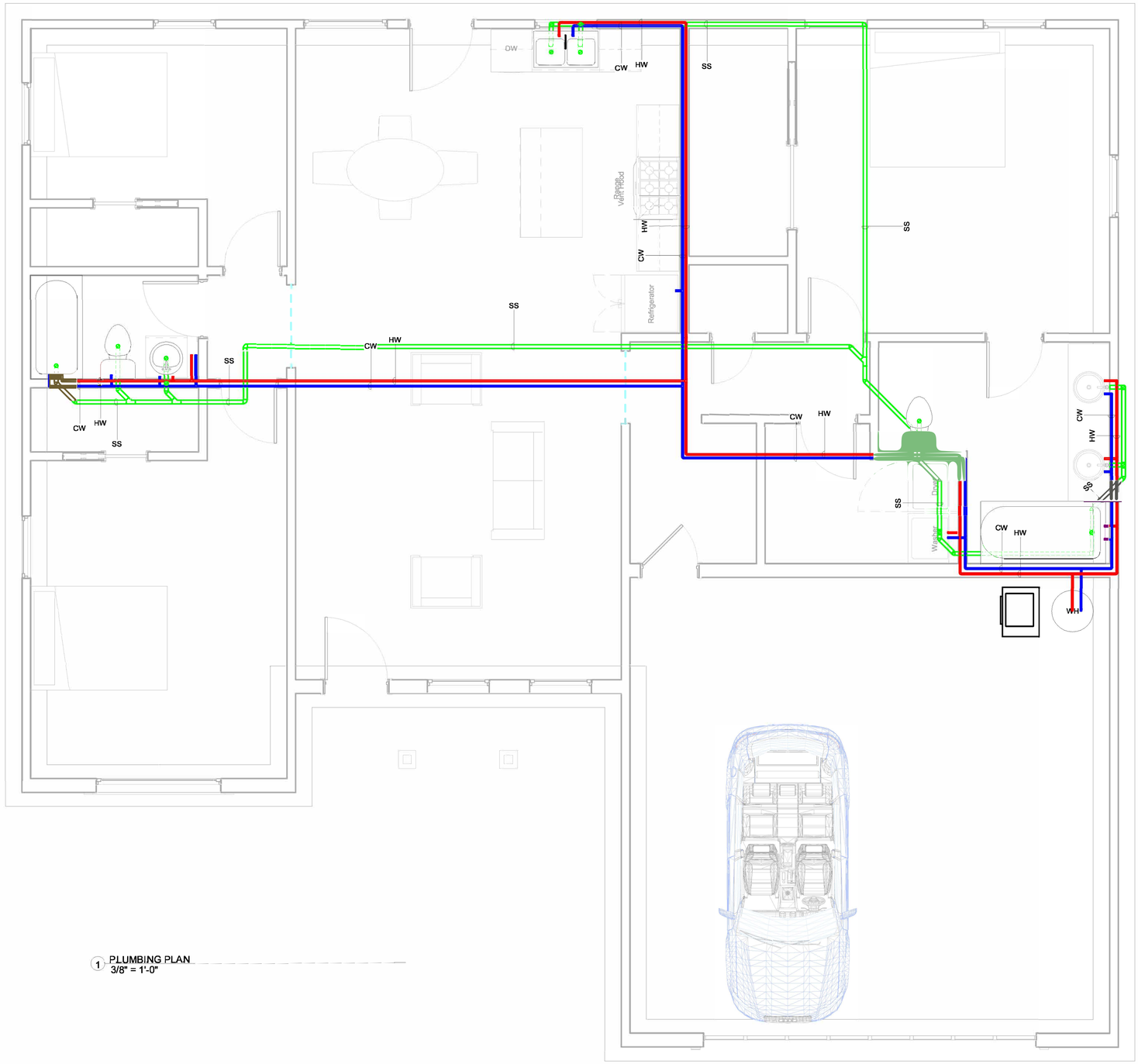

1 PLUMBING PLAN
3/8" = 1'-0"

NONYEBUAGU@ONYEDESIGNS.COM

STATE OF TEXAS
J.L.O. BURGOS ZEPEDA
135702
LICENSED PROFESSIONAL ENGINEER
TBPE F-21256
IHP ENGINEERING
08-4-22

No.	Description	Date

PLUMBING PLAN

Date	02/07/2021
Drawn by	ONYE DESIGNS
Checked by	RD

P101

Scale 3/8" = 1'-0"

2/7/2021 9:39:01 PM

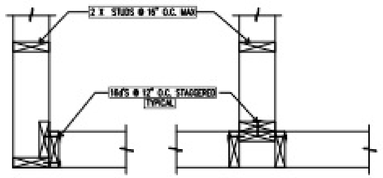

STUD WALLS AND INTERSECTIONS CORNERS

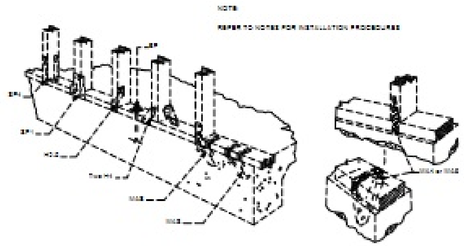

SILL PLATE TO FOUNDATION CONNECTION

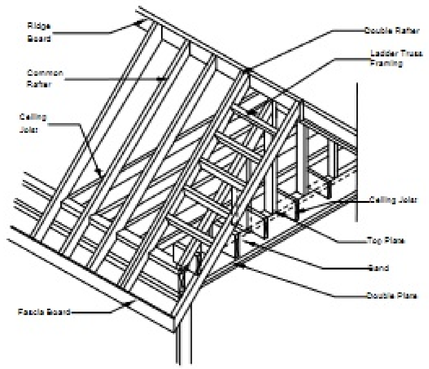

GABLE ROOF FRAMING DETAIL WITH OVERHANG

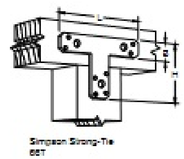

TYP. POST CAP INSTALLATION

54' - 4"

Ceiling Joist Span Schedule

Maximum Ceiling Joist Spans (Excerpt IRC Table 802.4)						
Species	Grade	Joist Size	Limited Attic Storage		Without Attic Storage	
			16" o.c.	24" o.c.	16" o.c.	24" o.c.
SYP	#2	2x6	13'-6"	11'-0"	17'-8"	15'-6"
		2x8	17'-5"	14'-2"	23'-4"	20'-1"
		2x10	20'-9"	16'-11"	26'-0"	23'-11"
	#3	2x6	10'-5"	8'-6"	14-9"	12'-0"
		2x8	13'-3"	10'-10"	18'-9"	15'-4"
		2x10	15'-8"	12'-10"	22'-2"	18'-1"
SPF	#2	2x6	12'-10"	10'-6"	16'-11"	14'-9"
		2x8	16'-3"	13'-3"	22'-4"	18'-9"
		2x10	29'-10"	16'-3"	26'-0"	22-11"
DF-L	#2	2x6	12'-10"	10'-6"	17'-8"	14'-10"
		2x8	16'-3"	13'-3"	23'-0"	18'-9"
		2x10	19'-10"	16'-3"	26'-0"	22'-11"

Wall Stud Schedules

Load Bearing Walls (Excerpt IRC Table R602.3.1) Maximum Allowable Length & Spacing of Load Bearing Wall Studs			
Stud Height (feet)	Roof + Ceiling	Roof, Ceiling and one floor	Roof, Ceiling and two floors
<10	2x4 @ 16" o.c.	2x4 @ 16" o.c.	2x6 @ 16" o.c.
12	2x4 @ 16" o.c.	2x6 @ 16" o.c.	2x6 @ 16" o.c.
14	2x6 @ 16" o.c.	2x6 @ 16" o.c.	2x6 @ 16" o.c.
16	2x6 @ 16" o.c.	2x6 @ 16" o.c.	2x6 @ 12" o.c.
18	2x6 @ 16" o.c.	2x6 @ 16" o.c.	2x6 @ 12" o.c.
20	2x6 @ 8" o.c.	2x6 @ 8" o.c.	2x6 @ 8" o.c.
22	2x6 @ 8" o.c.	2x6 @ 8" o.c.	See Engineer
24	2x6 @ 8" o.c.	2x6 @ 8" o.c.	See Engineer

1. Assumes SPF stud grade or better.
2. Balloon frames or tall walls (greater than 12' max) shall be #2 grade or better.
3. For exterior walls exposed to wind, stud lengths shall be limited by the following.

Maximum Exterior Stud Length (Excerpt from WFCM Table 3.20A)						
		Maximum Stud Length 16" O.C.				
		90 MPH	100 MPH	110 MPH	120 MPH	130 MPH
2x4	Stud	12'-0"	10'-8"	9'-8"	8'-10"	8'-1"
	#2	13'-6"	12'-7"	11'-9"	11'-1"	10'-5"
2x6	Stud	18'-0"	16'-1"	14'-6"	13'-3"	12'-2"
	#2	†	†	18'-0"	17'-1"	15'-8"

This table assumes SPF or equivalent. For other material, size, or spacing combinations, refer to the WFCM.
† - Allowable stud length exceeds 20 feet.

Where exterior walls are sheathed with wood structural panels, mix stud lengths shall be per the following.

Maximum Exterior Stud Length (for walls with wood structural sheathing) (Excerpt from WFCM Table 3.20B)						
		Maximum Stud Length 16" O.C.				
		90 MPH	100 MPH	110 MPH	120 MPH	130 MPH
2x4	Stud	12'-10"	11'-4"	11'-2"	10'-2"	9'-4"
	#2	13'-6"	12'-7"	11'-9"	11'-1"	10'-5"
2x6	Stud	19'-8"	17'-6"	15'-10"	14'-5"	13'-3"
	#2	†	†	18'-10"	17'-9"	16'-9"

This table assumes SPF or equivalent. For other material, size, or

Nailing Schedule

Fastening Location	IRC Table R602.3(1)	IBC Table 2304.9.1
Joist to Sill or Girder	3 - 8d (Toenail)	3-3" x 0.131" nails (Toenail)
Bridging to Joist	2 - 8d (Toenail each end)	2-3" x 0.131" nails (Toenail each end)
Sole Plate to Joist or Blocking	3 - 16d @ 16" oc (Facenail)	3" x 0.131" nails @ 8" oc (facenail)
Top Plate to Stud	2 - 16d (Endnail)	3-3" x 0.131" nails (Endnail)
Stud to Sole Plate	3 - 8d or 2 - 16d (Toenail)	4-3" x 0.131" nails (Toenail) or 2-3" x 0.131" (Endnail)
Double Studs	10d @ 24" oc (Facenail)	3" x 0.131" nails @ 8" oc (Facenail)
Doule Top Plates	10d @ 24" oc (Facenail)	3" x 0.131" nails @ 12" oc (Facenail)
Top Plates Laps & Intersections	2 - 10d (Facenail)	3-3" x 0.131" nails (Facenail)
Continuous Header, Two Pieces	16d @ 16" oc along each edge	----------
Ceiling Joist to Plate	3-8d (Toenail)	5-3" x 0.131" nails (Toenail)
Continuous Header to Stud	4 - 8d (Toenail)	----------
Ceiling Joist, Laps over Partitions	3 - 10d (Facenail)	4-3" x 0.131" nails (Facenail)
Ceiling Joists to Parallel Rafters	3 - 10d (Facenail)	4-3" x 0.131" nails (Facenail)
Built - Up Corner Studs	10d @ 24" oc	3" x 0.131" nails @16" oc
Built - Up girders & beams	10d @ 32" oc Top, Bot & Staggered - 2 nails @ ends & each splice	3" x 0.131" nails @ 24" oc (Face nail) at Top and Bottom and Staggered 3- 3" x 0.131" nails (Face nail) at Ends and at each splice
Built - up Wood Columns	16d @ 8" oc (2x4s); 2 rows 16d @ 8" oc for 2x6 or greater	----------
Roof or Floor Truss to Plate	3 - 8d (Toenail)	3-3" x 0.131" nails (Toenail)
Ledger Strip	3 - 16d (Facenail)	4-3" x 0.131" nails
Blocking @ joists/rafters to Top Plate	3 - 8d (Toenail)	3-3" x 0.131" nails (Toenail)
Rim Joist to Top Plate	8d @ 6" oc (Toenail)	3" x 0.131" nails @ 6" oc (Toenail)
Rafter to Plate	2 - 16d (Toenail)	3-3" x 0.131" nails (Toenail)
Collar Tie to Rafter	3 - 16d (Facenail)	4-3" x 0.131" nails (Facenail)
Jack Rafter to Hip	4 - 16d (Toenail)/3 - 16d (Facenail)	4-3" x 0.131" nails (Toenail) & 3-3" x 0.131" nails (Facenail)
Roof Rafter to 2x Ridge Bm	4 - 16d (Toenail)/3 - 16d (Facenail)	3-3" x 0.131" nails (Toenail) & 3-3" x 0.131" nails (Facenail)
Rafter Ties to Rafters	3 - 8d (Facenail)	----------
Joist to Band Joist	3 - 16d (Facenail)	4-3" x 0.131" nails

1. On shear walls and diaphragms, nails shall be placed not less than 3/8 inch from the panel edge.

Loose Lintels for Masonry Support

Masonry Weight/Width (NTE)	Opening Width	Height of Masonry Veneer				Arch Action
		12"	24"	36"	48"	
32 psf (3" Max Width)[6]	≤ 6'	3 x 3 x ¼	3 x 3 x ¼	3 x 3 x ¼	3 x 3 x ¼	3 x 3 x ¼
	≥6' - <8'-3"	3 x 3 x ¼	3½ x 3½ x ¼	4 x 3 x ¼	4 x 3½ x ¼	3½ x 3½ x ¼
	>8'-3" - ≤12'	4 x 3 x ¼	5 x 3½ x ¼	5 x 3½ x 5/16	6 x 4 x 5/16	6 x 4 x 5/16
	>12' - ≤16'-3"	5 x 3½ x 5/16	6 x 4 x 3/8	7 x 4 x 1/2	7 x 4 x ½	8 x 4 x ½
40 psf (4" Max Width)[6]	≤ 6'	3½ x 3½ x ¼	3½ x 3½ x ¼	3½ x 3½ x ¼	3½ x 3½ x ¼	3½ x 3½ x ¼
	>6' - ≤8'-3"	3½ x 3½ x ¼	3½ x 3½ x ¼	4 x 3½ x ¼	5 x 3½ x ¼	4 x 3½ x ¼
	>8'-3" - ≤12'	4 x 3½ x ¼	5 x 3½ x ¼	6 x 4 x 5/16	6 x 4 x 3/8	6 x 4 x 5/16
	>12' - ≤16'-3"	5 x 3½ x 3/8	7 x 4 x ½	7 x 4 x ½	8 x 4 x ½	8 x 4 x ½
60 psf (4" Max Width)[6]	≤ 6'	3½ x 3½ x ¼	3½ x 3½ x ¼	3½ x 3½ x ¼	4 x 3½ x ¼	3½ x 3½ x ¼
	>6' - ≤8'-3"	3½ x 3½ x ¼	4 x 3½ x ¼	5 x 3½ x ¼	5 x 3½ x ¼	5 x 3½ x ¼
	>8'-3" - ≤12'	5 x 3½ x ¼	6 x 4 x 5/16	6 x 4 x 5/8	7 x 4 x ½	7 x 4 x ½
	>12' - ≤16'-3"	6 x 4 x 5/16	7 x 4 x ½	8 x 4 x ½	-----	-----

Steel Lintel:
1. All lintels shall be A36 steel, oriented in the strong direction (longer leg vertical).
2. All lintels shall extend at least 4 inches beyond each end of the opening.
3. The arching action assumes that the weight of the masonry load is transferred around the opening at a 45 degree angle. This assumption is valid when there is sufficient masonry on both sides of the opening to carry the load from above and when no openings interrupt the arch action.
4. Deflection is limited to L/600 or 0.30", whichever is less.
5. Lintels are designed for supporting non-structural masonry veneer only. Other gravity loads shall be carried by other structural members. Lintels shall not be attached to header/beams U.N.O.
6. Table based on typical sizes and weights. Builder to verify. Contact this office for alternate materials.
7. Masonry shall not extend more than ½" past the edge of the horizontal leg.
8. Reference: Brick Industry Association and IRC R703.7.3 .

JOB COPY

APPROVED
Subject To All
Field Inspections/Approvals

APPROVED
By chad liford at 10:28 am, Sep 06, 2022

NONYEBUAGU@GMAIL.COM

STATE OF TEXAS
J.L.O. BURGOS ZEPEDA
135702
LICENSED PROFESSIONAL ENGINEER
TBPE F-21256
THP ENGINEERING
08-4-22

No.	Description	Date

details

Date	02/07/2021
Drawn by	ONYE DESIGNS
Checked by	RD

A102

Scale 3/8" = 1'-0"

2/7/2021 9:46:18 PM

APPROVED
By chad liford at 10:28 am, Sep 06, 2022

APPROVED
Subject To All
Field Inspections/Approvals

JOB COPY

GENERAL FRAMING FOR CEILING AND ROOF:

CEILING STRUCTURE SHALL BE 2X10 @ 16" O.C.
A/C OR OTHER EQUIPMENT AREA SHALL CONSIT
OF 2X12@ 12" O.C.

ROOF STRUCTURE SHALL CONSIST OF 2X8 @ 16"
o.c. RAFTERS TO BE 2X8

REFER TO NAILING SHCEDULE AND BRACING
PLAN DETAILS.

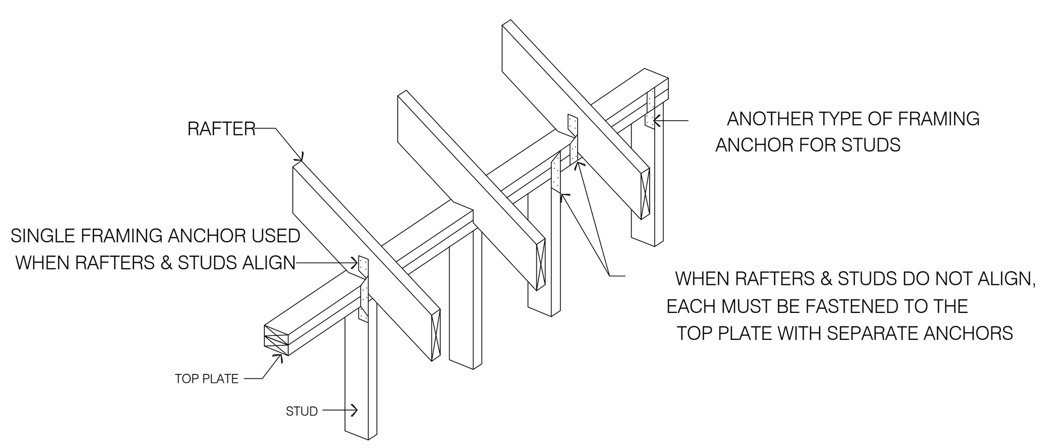

① FASTENING RAFTERS TO THE WALL FRAMING

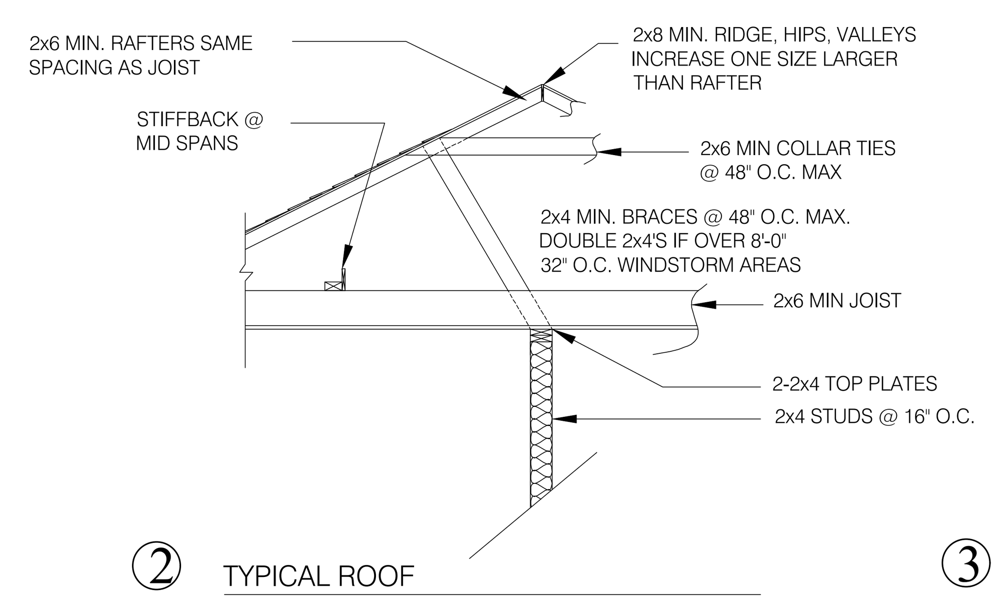

② TYPICAL ROOF
not to scale

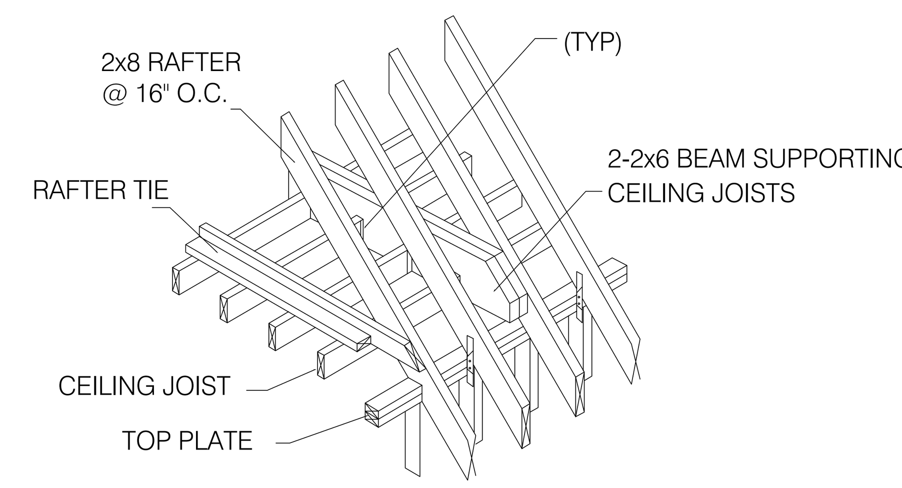

③ BEAM & RAFTER TIE DETAIL
not to scale

PLAN LEGEND

1.0		DESIGNATES LOCATION OF FLOOR WALLS BELOW
2.0		DESIGNATES DIRECTION OF FLOOR JOISTS
3.0		DESIGNATES SHEAR WALL
4.0	P1	DESIGNATES SHEAR WALL TYPE. RE: SCHEDULE, NOTES, AND DETAILS ON SHEET AS SHOWN
5.0		DESIGNATES SHEAR WALL HOLD-DOWN ANCHOR.
6.0		DESIGNATES SHEAR WALL HOLD-DOWN ANCHOR BEFORE FIRST FLOOR FRAMING
7.0		DESIGNATES BEAM HANGER, IF IDENTIFIED ON PLAN, USE TYPICAL HANGERS SPECIFIED IN GENERAL NOTES.
8.0		DESIGNATE STEEL OR WOOD COLUMNS
9.0		DESIGNATE COL. FROM FLR. ABOVE.
10.0		DESIGNATES 2x6 TREATED PONY WALL.
11.0	V1	DESIGNATES CRAWL SPACE VENT.
12.0		DESIGNATES CRAWL SPACE ACCESS PANEL.
13.0		DESIGNATES FLOOD VENT.

Date: 06/22/2022
Scale: N.T.S
Drawn By: R.R.
Page: 6

PROJECT:
116 WILLOW LANE,
ROANOKE, TEXAS 76262.

ISSUE RECORD
DATE: | ISSUED FOR: | COMMENTS:
Drawing File:

STAMP:
STATE OF TEXAS
J.L.O. BURGOS ZEPEDA
135702
LICENSED
PROFESSIONAL ENGINEER
08-4-22

SHEET TITLE:
ROOF FRAMING DETAILS

SHEET:
A-6

ALL PERIMETER WALLS ARE SHEAR WALLS TO BE ANCHORED WITH EXPANSION ANCHOR AS SHOWN.

APPROVED
By chad liford at 10:28 am, Sep 06, 2022

APPROVED
Subject To All
Field Inspections/Approvals

JOB COPY

1. THE INTENDED DESIGN STANDARDS (LATEST EDITION) AND/OR CRITERIA ARE AS FOLLOWS:

GENERAL INTERNATIONAL RESIDENTIAL/BUILDING CODE 2018 EDITION
WOOD AITC
WOOD TRUSSES TPI

2. DESIGN LOADS

DEAD LOADS
ROOF 10 PSF – COMPOSITION SHINGLE
LIVE LOADS
FLOORS 40 PSF
ROOF 20 PSF
CEILING JOIST 10 PSF
3. SNOW LOAD : 5PSF
4. WIND LOAD : 115MPH APPLIED PER I(B/R)C I = 1.0 EXPOSURE "B"
5. SEISMIC : SEISMIC CATEGORY "A"

ROUGH CARPENTRY

1. ALL WOOD FRAMING MATERIAL SHALL BE SURFACE DRY AND USED AT 19% MAXIMUM MOISTURE CONTENT. ALL FRAMING LUMBER SHALL BE NO. 2 SYP OR BETTER.

2. ALL LOAD BEARING PARTIONS SHALL RECEIVE A DOUBLE 2X TOP PLATE AND LAPPED AT CORNERS.

3. ALL PARTITIONS SHALL BE BRACED ON THE TOP AT INTERVALS NOT EXCEEDING 6 FEET ON CENTER

4. ALL MULTIPLE GIRDERS, BEAMS AND JOISTS SHALL BE GANG NAILED

5. ALL FRAMING EXPOSED TO WEATHER OR IN CONTACT WITH CONCRETE OR MASONRY SHALL BE PRESSURE TREATED.

6. PREFABRICATED METAL JOIST HANGERS, HURRICANE CLIPS, HOLD-DOWN ANCHORS, AND OTHER ACCESSORIES SHALL BE MANUFACTURED BY "SIMPSON STRONG TIE" OR APPROVED EQUAL.

7. PREFABRICATED LVL'S, GLULAMS, AND PSL HEADERS AND BEAMS SHALL BE MANUFACTURED BY "TRUS JOIST MacMILLAN CORP." OR APPROVED EQUAL. MINIMUM BENDING STRESSES SHALL BE AS FOLLOWS:

LVL'S = 2,600 PSI
PSL'S = 2,900 PSI
GLULAMS = 2,400 PSI

8. ALL PLATES, ANCHORS, NAILS, BOLTS, NUTS, WASHERS AND OTHER HARDWARE EXPOSED TO WEATHER SHALL BE HOT DIPPED GALVANIZED

9. INSTALL ALL BLOCKING NECESSARY FOR ATTACHING ALL FINISHES, GYPSUM WALLBOARD, CABINETRY , ETC.

10 ATTACH WOOD PLATES TO FOUNDATIONS WITH 1/2" ANCHOR BOLTS AT 4'-0" O.C. MAXIMUM SPACING WITH AT LEAST 2 BOLTS PER PLATE.

11. INSTALL COLUMNS AT ALL LINTELS, BEAMS, HEADERS EQUAL TO THE WIDTH OF THE BEAM. ALL MEMBERS WITH SPANS LESS THAN 5 FOOT SHALL HAVE SINGLE JACK STUDS.

12. ATTACH WALL AND ROOF SHEATHING TO FRAMING WITH 8d NAILS AT 12" O.C. INTERMEDIATE SUPPORTS AND 6" O.C. EDGE SUPPORTS

13. THE CONTRACTOR SHALL INSURE THAT ALL LOADS AND REACTIONS FROM BEAMS, BEARINGS WALLS, COLUMNS, ETC. ARE CONTINUOUSLY SUPPORTED TO THE FOUNDATION.

14. ALL FLOOR SHEATHING SHALL BE A MINIMUM 3/4" TONGUE AND GROOVE SHEATHING GLUED AND NAILED AT 6" O.C. WITH 8d NAILS.

15. TAPERED END CUTS SHALL MEET MANUFACTURERS REQUIREMENTS.

16. NOTCHING OF PREFABRICATED LUMBER SHALL NOT BE PERMITTED. WEB HOLES SHALL BE IN ACCORDANCE WITH MANUFACTURER'S RECOMMENDATIONS

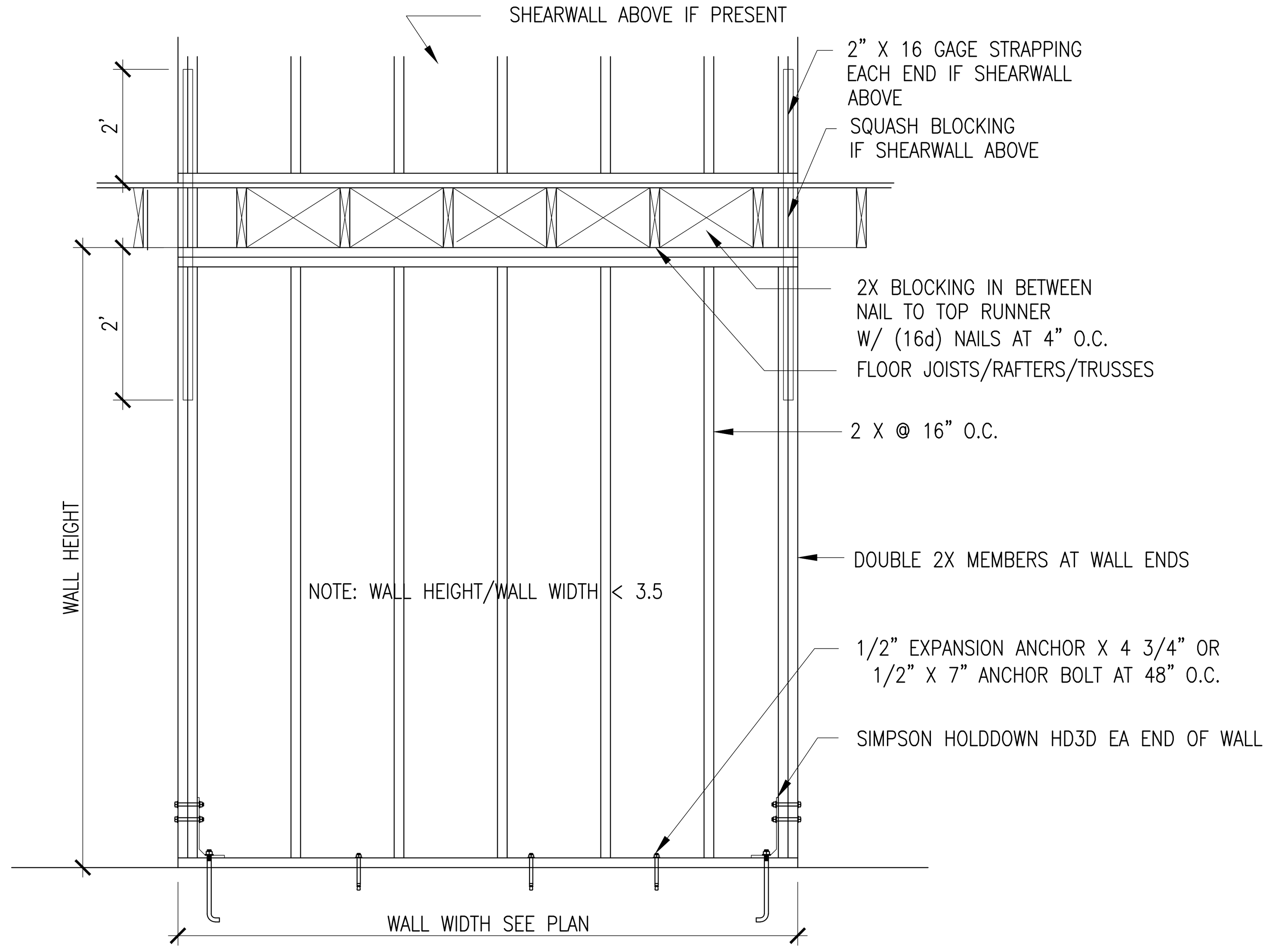

SHEARWALL SCHEDULE CONFORM TO IRC METHOD WSP			
MARK	WALL CONSTRUCTION	WALL & SILL PLATE ANCHORING	WALL CHORD MEMBER
	7/16" OSB PLYWOOD ONE FACE OF WALL (BLOCKED) W/ 8d NAILS @ 6" O.C. ALONG PANEL EDGES & 3"O.C. @ INTERIOR STUD LINE.	7/16" X 7" ANCHOR BOLTS @ 4'-0" O.C. MAX SPACING MINIMUM 2 PER PLATE	(2) 2X STUDS

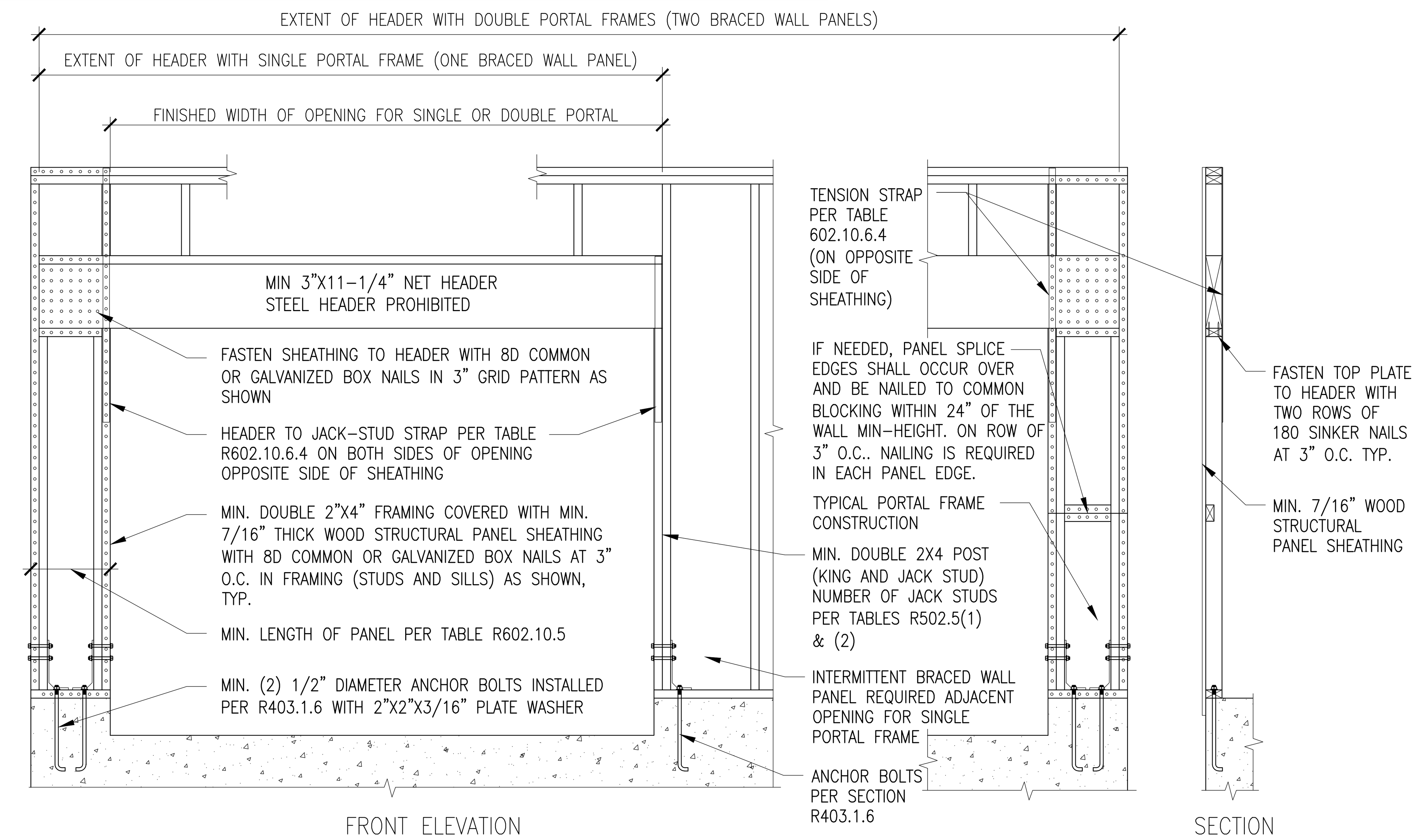

PORTAL FRAME DETAIL

NO SCALE

TYPICAL TALLWALL DETAIL

NO SCALE

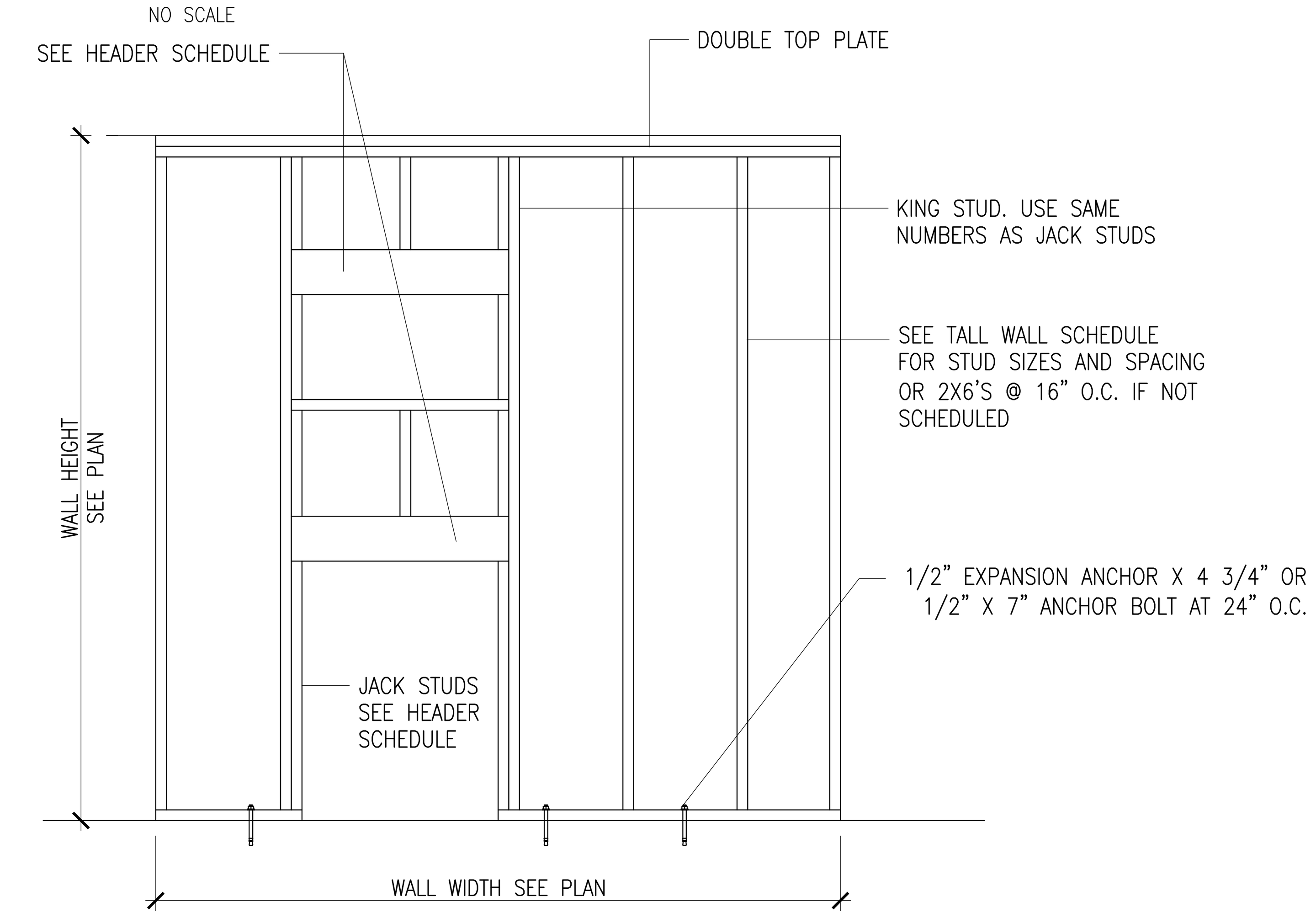

Date: 06/22/2022
Scale: N.T.S
Drawn By: R.R.
Page: 7

PROJECT: 116 WILLOW LANE, ROANOKE, TEXAS 76262.

ISSUE RECORD

DATE:	ISSUED FOR:	COMMENTS:

Drawing File:

STAMP: STATE OF TEXAS J.L.O. BURGOS ZEPEDA 135702 LICENSED PROFESSIONAL ENGINEER 08-4-22

SHEET TITLE: SHEAR WALL

SHEET: A-7

APPROVED
By chad liford at 10:28 am, Sep 06, 2022

ALL PERIMETER WALLS ARE SHEAR WALLS TO BE ANCHORED WITH EXPANSION ANCHOR AS SHOWN ON PAGE A7.
TWO INTERIOR SHEAR WALLS AS SHOWN (ANSHORS USES @24" O.C.)

APPROVED
Subject To All
Field Inspections/Approvals

JOB COPY

Use 32" wide alternate braced wall panels with hold-down brackets
Restrictions include:

- Can be substituted for any 48" wide panel (counts as 4' of braced wall panel length for bracing amount) - not just limited to garage openings.
- Requires sheathing on both sides of braced wall panel when supporting roof plus one floor; sheathing on one side applies only when supporting roof only.
- Alternate braced wall panels must be directly anchored to foundation with hold-down anchors or straps (use on lowest story only)

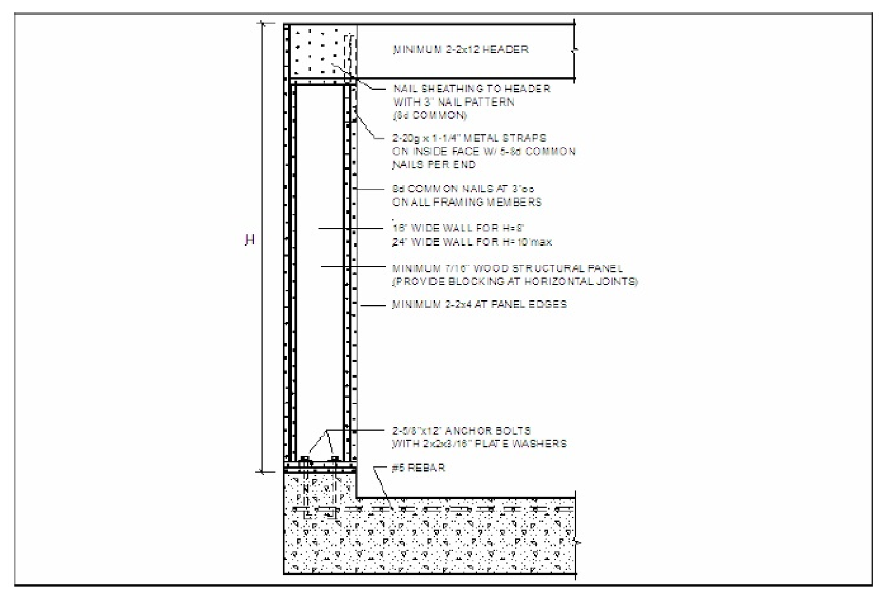

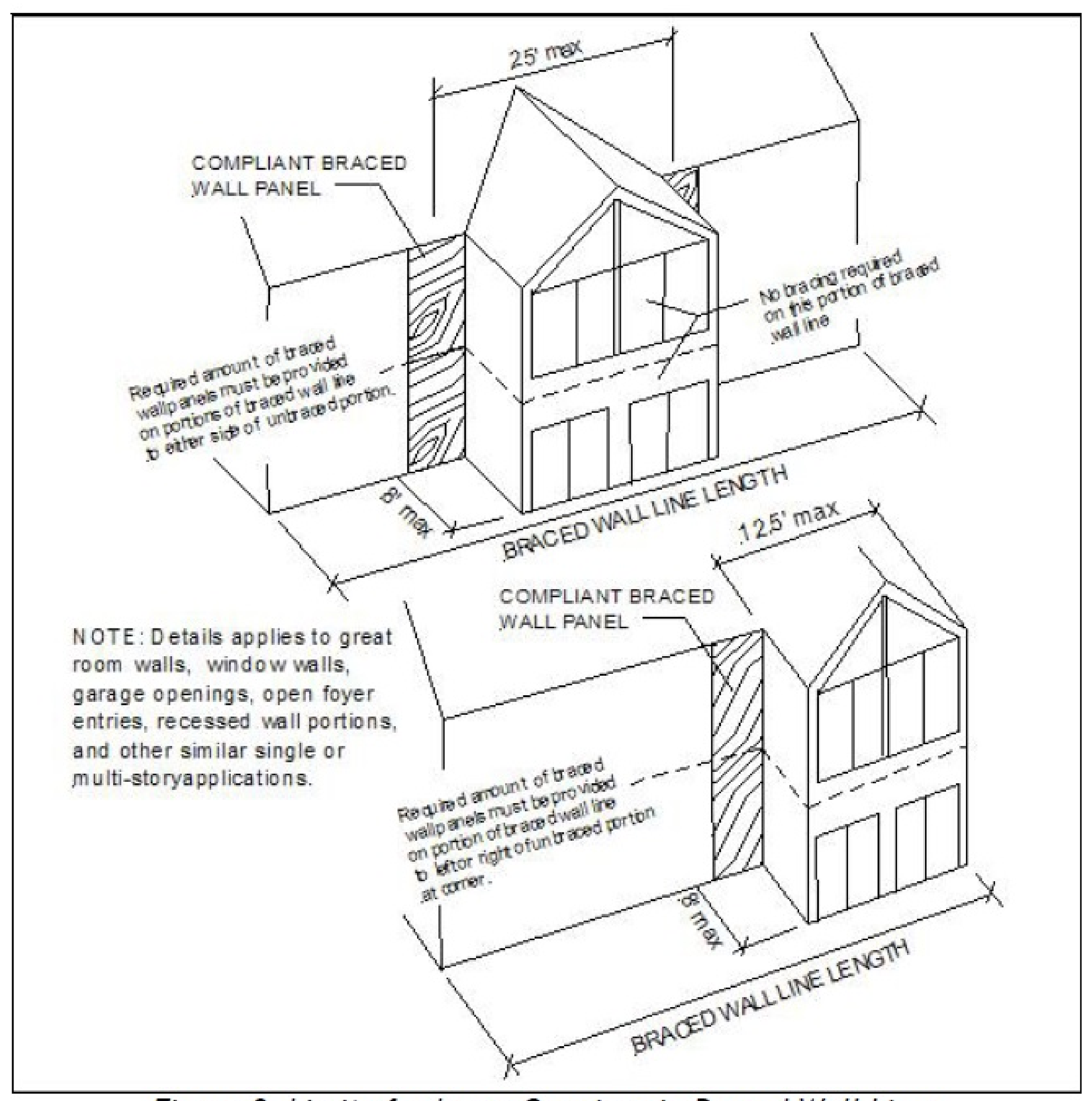

Figure 8: Limits for Large Openings in Braced Wall Lines

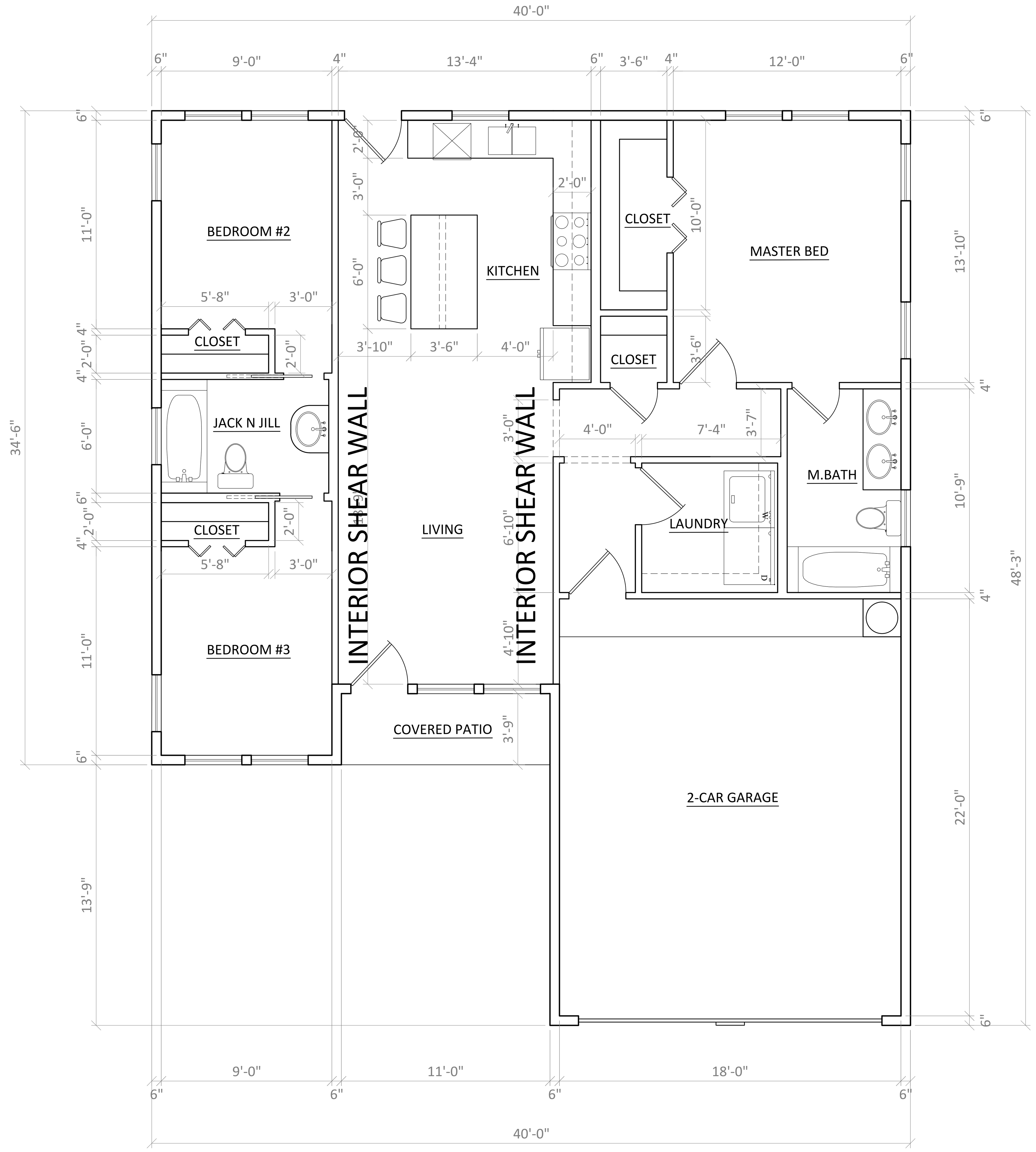

① SHEAR WALLS PLAN

0 4' 8' 12'
1/4" = 1'

Date: 07/20/2022
Scale: 1/4" = 1'
Drawn By: R.R.
Page: 1

PROJECT:
116 WILLOW LANE,
ROANOKE, TEXAS 76262.

ISSUE RECORD
DATE: ISSUED FOR: COMMENTS:

STATE OF TEXAS
J.L.O. BURGOS ZEPEDA
135702
LICENSED PROFESSIONAL ENGINEER
08-4-22

SHEET TITLE:
SHEAR WALLS PLAN

SHEET:
A-8

MINIMUM INLET TIME OF CONCENTRATION

TYPE OF AREA	MINIMUM INLET TIME
PARKS AND OPEN AREAS	20 MINUTES
RESIDENTIAL	15 MINUTES
INDUSTRIAL	10 MINUTES
BUSINESS	10 MINUTES
MERCANTILE DISTRICT	5 MINUTES

KEYED DRAINAGE NOTES:

1. EXISTING 18" RCP 20 LF CULVERT @ 0.80% SLOPE WITH EXISTING 6:1
2. PROP. 18" RCP 28 LF CULVERT @ 0.80% SLOPE WITH PROP.
3. PROP. 3-15" RCP 28 LF CULVERT @ 0.50% SLOPE WITH PROP.

LEGEND

- XX / XX / XX — Area Designation / Area (Acres) / Runoff in C.F.S.
- Drainage Area Divide
- Direction of Flow
- 491 — Existing 1 Foot Contour Interval
- 490 — Existing 5 Foot Contour Interval
- 491 — Proposed 1 Foot Contour Interval
- 490 — Proposed 5 Foot Contour Interval
- Invert/Swale

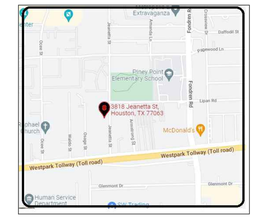

N

50' 0 25' 50'
SCALE: 1" = 50'

OSF-A AREA ONE CALCULATIONS

Area for Hyd. Method Calcs= **4.378 AC**

k= **1**

HYD	TYPE (ORIGIN)	Inflow Hyd(s)	Peak Outflow (cfs) 1-yr	5-yr	25-yr	50-yr	100-yr	HYDROGRAPH DESCRIPTION
1	Rational		4.35	5.12	6.37	7.22	10.39	PRE-DEVELOPED
2	Rational		12.38	17.62	23.14	25.62	28.32	POST-DEVELOPED
			Intensity (In/hr) Denton County 1-yr	5-yr	25-yr	50-yr	100-yr	
	10 min		4.04	5.75	7.55	8.36	9.24	POST-DEVELOPED
	15 min		3.31	3.9	4.85	5.5	7.91	PRE-DEVELOPED
			Runoff. Coeff.					
			0.3	0.3	0.3	0.3	0.3	PRE-DEVELOPED
			0.7	0. 7	0.7	0.7	0.7	POST-DEVELOPED FACTORED

SITE-A1 AREA CALCULATIONS

Area for Hyd. Method Calcs= **0.115 AC**

k= **1**

HYD	TYPE (ORIGIN)	Inflow Hyd(s)	Peak Outflow (cfs) 1-yr	5-yr	25-yr	50-yr	100-yr	HYDROGRAPH DESCRIPTION
1	Rational		0.11	0.13	0.17	0.19	0.27	PRE-DEVELOPED
2	Rational		0.33	0.46	0.61	0.67	0.74	POST-DEVELOPED
			Intensity (In/hr) Denton County 1-yr	5-yr	25-yr	50-yr	100-yr	
	10 min		4.04	5.75	7.55	8.36	9.24	POST-DEVELOPED
	15 min		3.31	3.9	4.85	5.5	7.91	PRE-DEVELOPED
			Runoff. Coeff.					
			0.3	0.3	0.3	0.3	0.3	PRE-DEVELOPED
			0.7	0. 7	0.7	0.7	0.7	POST-DEVELOPED FACTORED

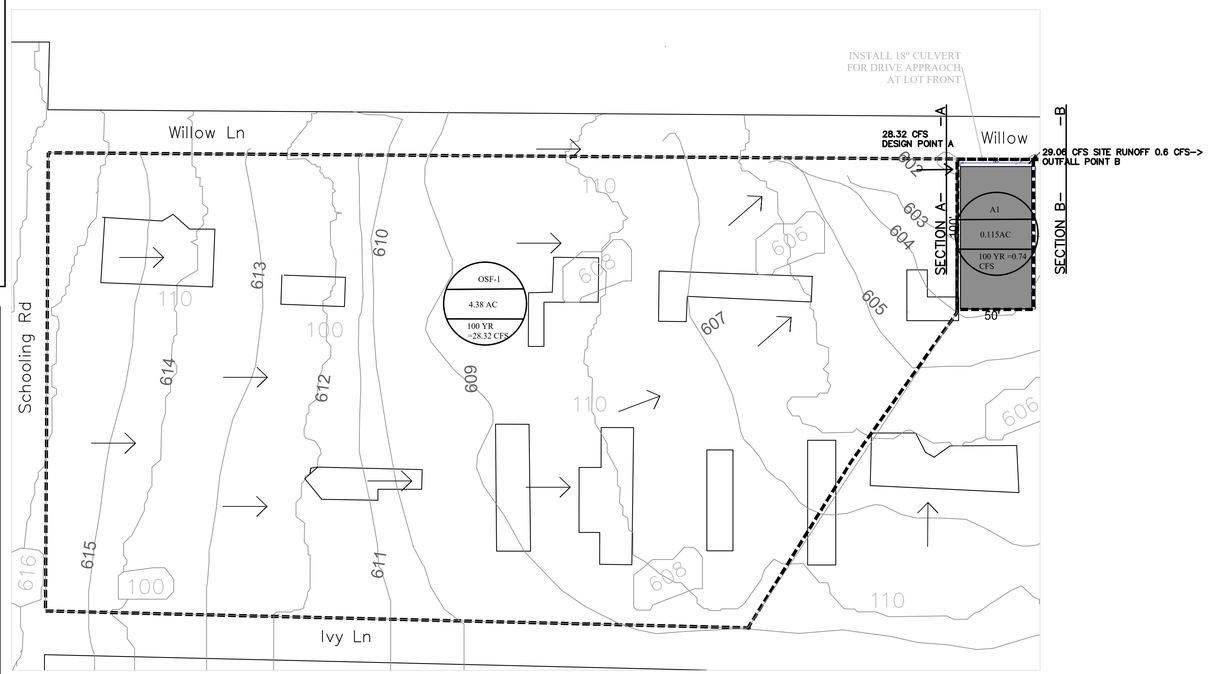

Note: Ditch has capacity 30 cubic feet per second to support runoff

APPROVED
Subject To All
Field Inspections/Approvals

REVISED
10:29 am, Sep 06, 2022

APPROVED
By chad liford at 10:29 am, Sep 06, 2022

ROAD APPROACH (TYP)

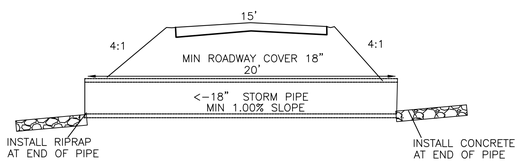

ROAD ACROSS SECTION WITH STORM CULVERT

N.T.S.

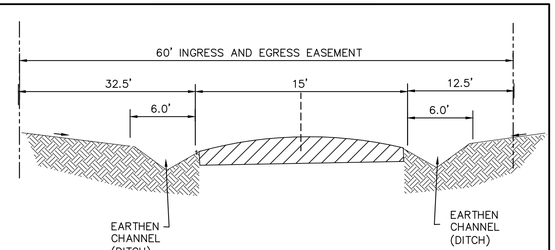

CROSS SECTION

N.T.S.

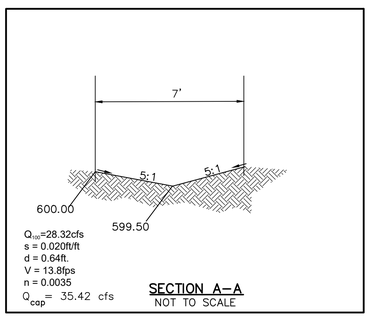

SECTION A—A
NOT TO SCALE

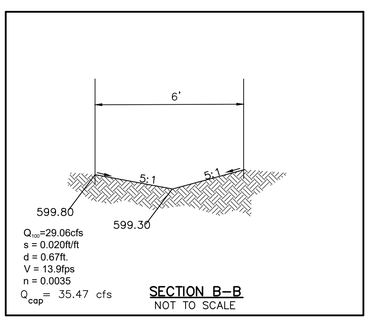

SECTION B—B
NOT TO SCALE

Date: 09/01/2022
Scale: 1/4" = 1'
Drawn By: R.R.
Page: 2

PROJECT:
116 WILLOW LANE,
ROANOKE, TEXAS 76262.

ISSUE RECORD
DATE: | ISSUED FOR: | COMMENTS:

Drawing File: C:\Users\JoseBurgos\Downloads\116 Willow Lane.pln

STATE OF TEXAS
J.L.O. BURGOS ZEPEDA
135702
LICENSED
PROFESSIONAL ENGINEER
09-01-2022

SHEET TITLE: DRAINAGE AREA MAP

SHEET: A-10

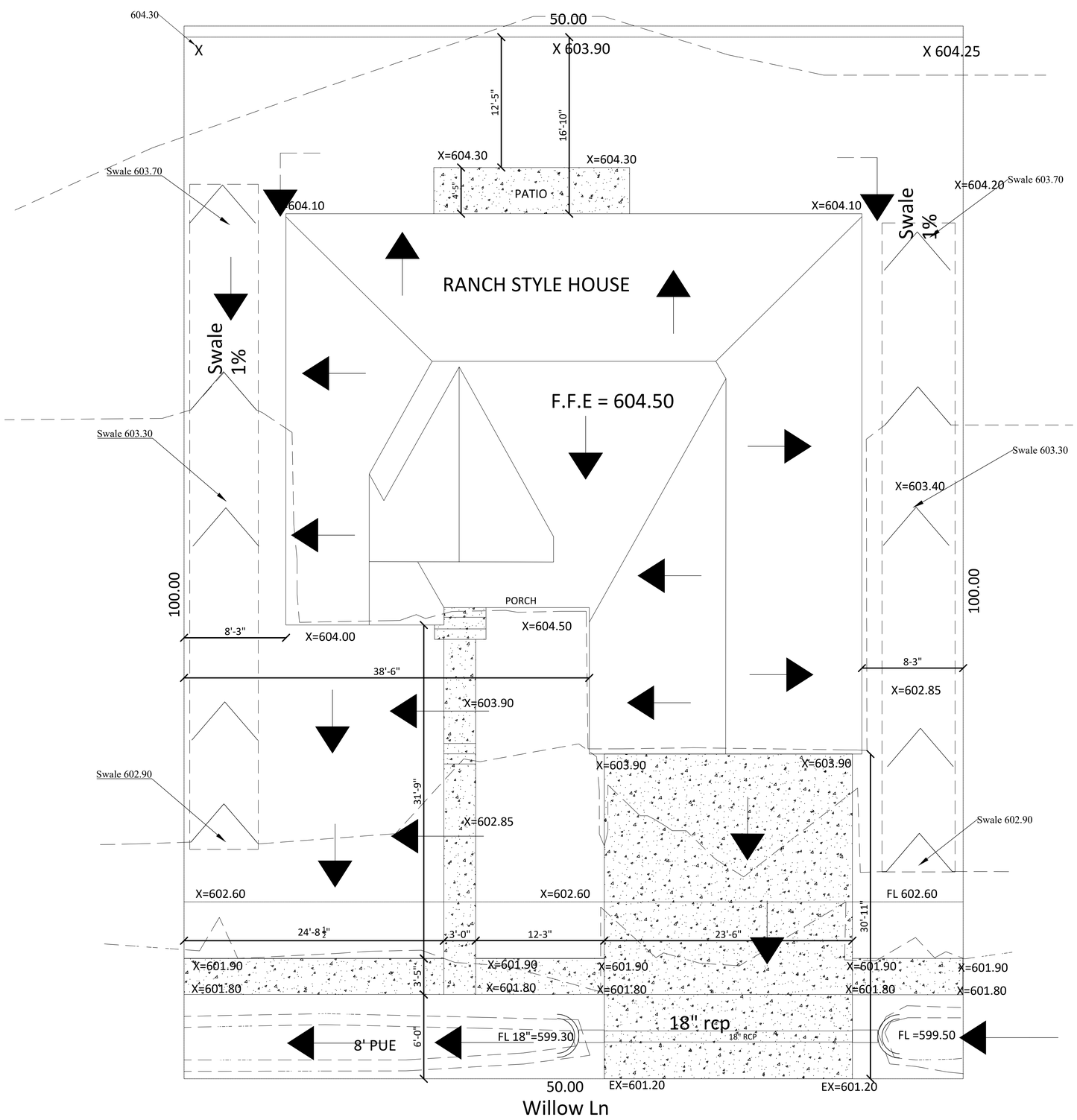

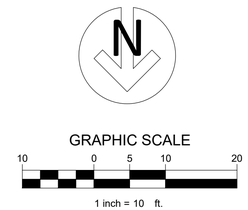

Type A Drainage
All Drainage to Street

APPROVED
Subject To All
Field Inspections/Approvals

REVISED
10:29 am, Sep 06, 2022

APPROVED
By chad liford at 10:29 am, Sep 06, 2022

Date: 09/01/2022
Scale: 1/4" = 1'
Drawn By: R.R.
Page: 2

PROJECT:
116 WILLOW LANE,
ROANOKE, TEXAS 76262.

ISSUE RECORD

DATE:	ISSUED FOR:	COMMENTS:

Drawing File: C:\Users\bradlbrger\Documents\WORKING EASEMENT FILES\116 WILLOW LANE.dwg

STATE OF TEXAS
J.L.O. BURGOS ZEPEDA
135702
LICENSED
PROFESSIONAL ENGINEER
09-01-2022

SHEET TITLE:
GRADING PLAN

SHEET:
C-3